°STELPRO

VERTICAL UNIT HEATER

VUH SERIES

OXFORD™ SERIES | SÉRIE

THE MAMMOTH TO HEAT LARGE AREAS

The VUH not only impresses with its good looks but also its great, powerful, and uncompromising operation. The greatest strength of this unit is its mode of operation; it is designed to circulate air continuously. The unit is responsible for recirculating the warm air that is often trapped near the ceiling and masterfully redirects it down 360°. The VUH, available from 5 kW to 60 kW, is an excellent choice for heating large areas.

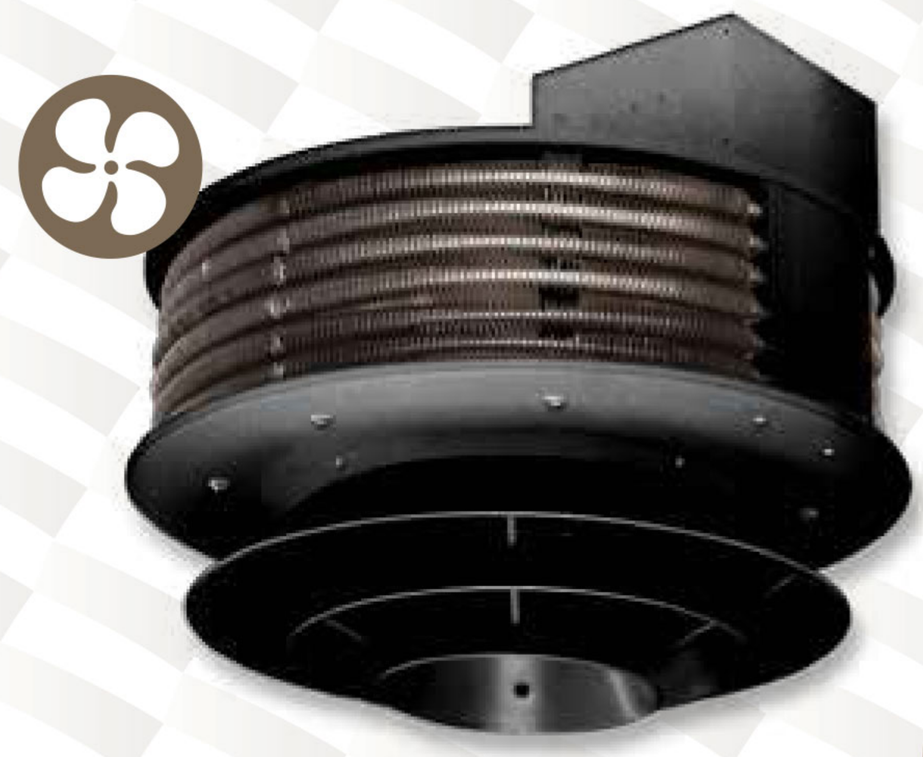

TRIPLE CONE UNIT (OPTIONAL CONE)

3 YEAR WARRANTY

HEAT RECYCLING SYSTEM
DRAWS IN THE WARM AIR AT THE CEILING AND REDIRECTS IT WHERE IT IS NEEDED MOST

CONE DIFFUSERS (OPTIONAL)
THREE SIZES AVAILABLE FOR BETTER AIR DISTRIBUTION

TOTALLY ENCLOSED MOTOR
WITH BALL BEARINGS

PERFECT FOR LARGE SPACES WITH HIGH CEILINGS

IDEAL FOR:
WAREHOUSE, FACTORY, INDOOR PARKING GARAGE, LARGE INDUSTRIAL AND COMMERCIAL AREAS

ACCESSORIES

PRODUCT	DESCRIPTION
VUHFS*	fan switch
VUHJC1CHAR	diffuser jet cone (5 kW to 10 kW units)
VUHJC2CHAR	diffuser jet cone (15 kW to 30 kW units)
VUHJC3CHAR	diffuser jet cone (40 kW to 60 kW units)
VUHC24RX*	relay kit without transformer 24 V
VUHDIS80CHAR*	disconnect switch [80 A]
VUHDIS100CHAR*	disconnect switch [100 A]
VUHDIS200CHAR*	disconnect switch [200 A]

* Factory installed

COLOUR
textured charcoal

FINISH
epoxy-polyester powdercoat

MANUFACTURING
- heavy-duty, 16-gauge steel cabinet
- three sizes of cone diffusers available for better air distribution
- thermal protection with automatic reset

MOTOR
totally enclosed with ball bearings

ELEMENT
tubular element sheathed with spiral-wound fins for improved heat dissipation

CONTROL
- 24 V, 120 V or 240 V control circuit
- terminal block for remote fan control
- all units have factory installed contactors
- connection of multiple units to the same thermostat is possible with a relay kit without transformer (optional) and an external transformer (not provided)

INSTALLATION
- four 1/2 in. (12.7 mm) mounting holes (5 kW to 10 kW units) for threaded rods (13-thread) (threaded rods not provided)
- four eyebolts for chain suspension (15 kW to 60 kW units)

°STELPRO reserves the right to modify descriptions, manufacturing specifications or prices without prior notice. **Returns are not accepted for orders of products with optional colours.**
For all the latest models and updated prices, please refer to our web site at www.stelpro.com.

TECHNICAL SPECIFICATIONS

240 V CONTROL	24 V CONTROL	120 V CONTROL	POWER	VOLTAGE	PHASE	POWER	FLOW	MOTOR	WEIGHT	
CODE	CODE	CODE	KILOWATTS	VOLTS	NB.	BTU/H	CFM	HP	KG	LB
VUH0581CCHAR	VUH0581C24CHAR	VUH0581C120CHAR	5	208	1	17 060	450	1/25	34	75
VUH0583CCHAR	VUH0583C24CHAR	VUH0583C120CHAR	5	208	3	17 060	450	1/25	34	75
VUH0521CCHAR	VUH0521C24CHAR	VUH0521C120CHAR	5/3.75	240/208	1	17 060	450	1/25	34	75
VUH0531CCHAR	VUH0531C24CHAR	VUH0531C120CHAR	5	347	1	17 060	450	1/25	34	75
VUH0563CCHAR	VUH0563C24CHAR	VUH0563C120CHAR	5	600	3	17 060	450	1/25	34	75
VUH0783CCHAR	VUH0783C24CHAR	VUH0783C120CHAR	7.5	208	3	25 590	600	1/25	34	75
VUH0721CCHAR	VUH0721C24CHAR	VUH0721C120CHAR	7.5/5.63	240/208	1	25 590	600	1/25	34	75
VUH0731CCHAR	VUH0731C24CHAR	VUH0731C120CHAR	7.5	347	1	25 590	600	1/25	34	75
VUH0763CCHAR	VUH0763C24CHAR	VUH0763C120CHAR	7.5	600	3	25 590	600	1/25	34	75
VUH1083CCHAR	VUH1083C24CHAR	VUH1083C120CHAR	10	208	3	34 120	750	1/25	34	75
VUH1021CCHAR	VUH1021C24CHAR	VUH1021C120CHAR	10/7.5	240/208	1	34 120	750	1/25	34	75
VUH1031CCHAR	VUH1031C24CHAR	VUH1031C120CHAR	10	347	1	34 120	750	1/25	34	75
VUH1063CCHAR	VUH1063C24CHAR	VUH1063C120CHAR	10	600	3	34 120	750	1/25	34	75
VUH1583CCHAR	VUH1583C24CHAR	VUH1583C120CHAR	15	208	3	51 180	1200	1/8	47.6	105
VUH1521CCHAR	VUH1521C24CHAR	VUH1521C120CHAR	15/11.25	240/208	1	51 180	1200	1/8	47.6	105
VUH1563CCHAR	VUH1563C24CHAR	VUH1563C120CHAR	15	600	3	51 180	1200	1/8	47.6	105
VUH2083CCHAR	VUH2083C24CHAR	VUH2083C120CHAR	20	208	3	68 240	1600	1/8	47.6	105
VUH2021CCHAR	VUH2021C24CHAR	VUH2021C120CHAR	20/15	240/208	1	68 240	1600	1/8	47.6	105
VUH2063CCHAR	VUH2063C24CHAR	VUH2063C120CHAR	20	600	3	68 240	1600	1/3	47.6	105
VUH2583CCHAR	VUH2583C24CHAR	VUH2583C120CHAR	25	208	3	85 300	2000	1/8	47.6	105
VUH2521CCHAR	VUH2521C24CHAR	VUH2521C120CHAR	25/18.75	240/208	1	85 300	2000	1/8	47.6	105
VUH2563CCHAR	VUH2563C24CHAR	VUH2563C120CHAR	25	600	3	85 300	2000	1/3	47.6	105
VUH3083CCHAR	VUH3083C24CHAR	VUH3083C120CHAR	30	208	3	102 300	2300	1/8	47.6	105
VUH3021CCHAR	VUH3021C24CHAR	VUH3021C120CHAR	30/22.5	240/208	1	102 300	2300	1/8	47.6	105
VUH3063CCHAR	VUH3063C24CHAR	VUH3063C120CHAR	30	600	3	102 300	2300	1/8	47.6	105
VUH4063CCHAR	VUH4063C24CHAR	VUH4063C120CHAR	40	600	3	136 500	4000	3/4	90.7	200
VUH5063CCHAR	VUH5063C24CHAR	VUH5063C120CHAR	50	600	3	176 050	4000	3/4	90.7	200
VUH6063CCHAR	VUH6063C24CHAR	VUH6063C120CHAR	60	600	3	204 720	4800	3/4	90.7	200

Le code C24 ne s'applique qu'au thermostat et non au ventilateur, qui reste alimenté à 240 V.

CONE DIFFUSERS & THROW DISTANCES

PRODUCT	NB	UNIT	WEIGHT		SURFACE A		SURFACE B	
CODE	CONE	KILOWATTS	KG	LB	M	FT.	M	FT.
---	WITHOUT CONE	5-10	34.0	75	3.7	12	5.8	19
---	WITHOUT CONE	15-30	47.6	105	6.1	20	8.3	27
---	WITHOUT CONE	40-60	90.7	200	9.1	30	14.0	46
VUHSC1	SINGLE	5-10	34.0	75	3.1	10	6.9	22
VUHSC2	SINGLE	15-30	47.6	105	3.7	12	9.5	31
VUHSC3	SINGLE	40-60	90.7	200	4.9	16	10.0	33
VUH3C1	TRIPLE	5-10	34.0	75	3.1	10	9.5	31
VUH3C2	TRIPLE	15-30	47.6	105	4.2	15	14.0	46
VUH3C3	TRIPLE	40-60	90.7	200	6.1	20	15.0	49
VUH4C1	QUADRUPLE	5-10	34.0	75	3.1	10	10.4	34
VUH4C2	QUADRUPLE	15-30	47.6	105	4.2	15	15.3	50
VUH4C3	QUADRUPLE	40-60	90.7	200	6.1	20	17.1	56

WITHOUT CONE

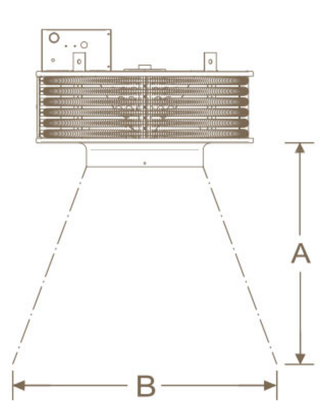

SINGLE CONE

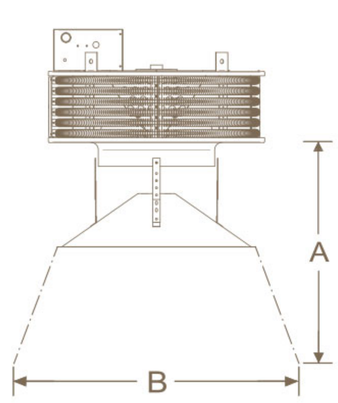

TRIPLE CONE

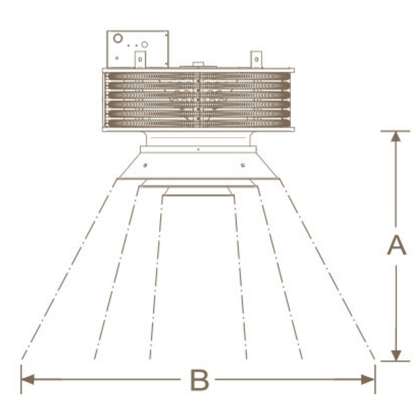

QUADRUPLE CONE

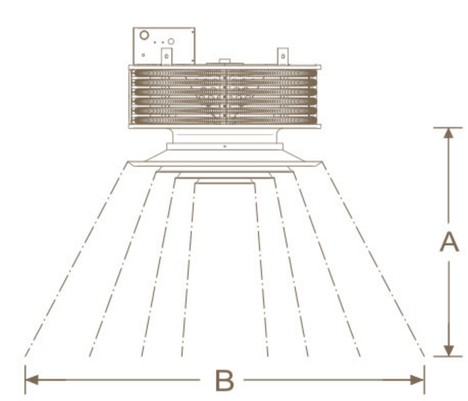

°STELPRO reserves the right to modify descriptions, manufacturing specifications or prices without prior notice. **Returns are not accepted for orders of products with optional colours.**
For all the latest models and updated prices, please refer to our web site at www.stelpro.com.