ANALOG PANEL METERS

MODEL 250

3 1/2" & 4 1/2" SQUARE

SPECIFICATIONS

Accuracy .....±2% Iron-Vane 50/60Hz
When standard 60Hz ammeters are used on the extreme limits of 25 or 400Hz, an additional 0.75% error may be experienced.
ANSI Specification..... All Meters meet ANSI C39.1
Overload..... Momentary - 10 x rated current, 10 consecutive intervals of 1/2 second with a 1 minute interval between successive applications; sustained, 120% for 6 hours.
Scale Length.....3 1/2".....2.88"
4 1/2".....3.93"
Scale Arc .....90°
Insulation Level.....2600VRMS, 1 min.
Burden Data.....0.5VA, 0.5PF lag
Response Time.....2.5 sec. max.
NOTE..... IEC144..... Add Suffix "IEC"

E91703

AC VOLTMETERS 25-400Hz, Iron Vane			
VOLTS SCALE	VOLTS RATED	CATALOG NUMBER	
		3 1/2"	4 1/2"
150	150	250-344-PZPZ	250-444-PZPZ
300	300	250-344-RXRX	250-444-RXRX
600	600	250-344-SJSJ	250-444-SJSJ
600	150*	250-344-PZSJ	250-444-PZSJ
750	150*	250-344-PZSM	250-444-PZSM
3000	150*	250-344-PZVJ	250-444-PZVJ
5250	150*	250-344-PZUL	250-444-PZUL

*PT Rated

AC AMMETERS Transformer-Rated, 0-5 Amperes, 25-400Hz, Iron Vane		
AMP SCALE	CATALOG NUMBER	
	3 1/2"	4 1/2"
5 Amp	250-340-LSLS	250-440-LSLS
10 Amp	250-340-LSMT	250-440-LSMT
15 Amp	250-340-LSND	250-440-LSND
20 Amp	250-340-LSNG	250-440-LSNG
30 Amp	250-340-LSNL	250-440-LSNL
40 Amp	250-340-LSNP	250-440-LSNP
50 Amp	250-340-LSNT	250-440-LSNT
60 Amp	250-340-LSNW	250-440-LSNW
75 Amp	250-340-LSPB	250-440-LSPB
80 Amp	250-340-LSPD	250-440-LSPD
100 Amp	250-340-LSPK	250-440-LSPK
150 Amp	250-340-LSPZ	250-440-LSPZ
200 Amp	250-340-LSRL	250-440-LSRL
250 Amp	250-340-LSRS	250-440-LSRS
300 Amp	250-340-LSRX	250-440-LSRX
400 Amp	250-340-LSSC	250-440-LSSC
500 Amp	250-340-LSSF	250-440-LSSF
600 Amp	250-340-LSSJ	250-440-LSSJ
800 Amp	250-340-LSSN	250-440-LSSN
1 Kiloamp	250-340-LSVA	250-440-LSVA
1.2 Kiloamp	250-340-LSVB	250-440-LSVB
1.5 Kiloamp	250-340-LSVC	250-440-LSVC
1.6 Kiloamp	250-340-LSTE	250-440-LSTE
2.0 Kiloamp	250-340-LSVE	250-440-LSVE
2.4 Kiloamp	250-340-LSTU	250-440-LSTU
2.5 Kiloamp	250-340-LSTV	250-440-LSTV
3.0 Kiloamp	250-340-LSVJ	250-440-LSVJ

MOUNTING/DIMENSIONS

3 1/2"

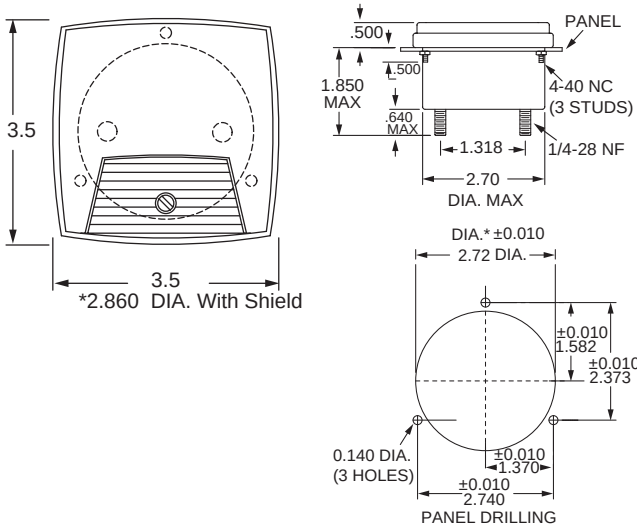

4 1/2"

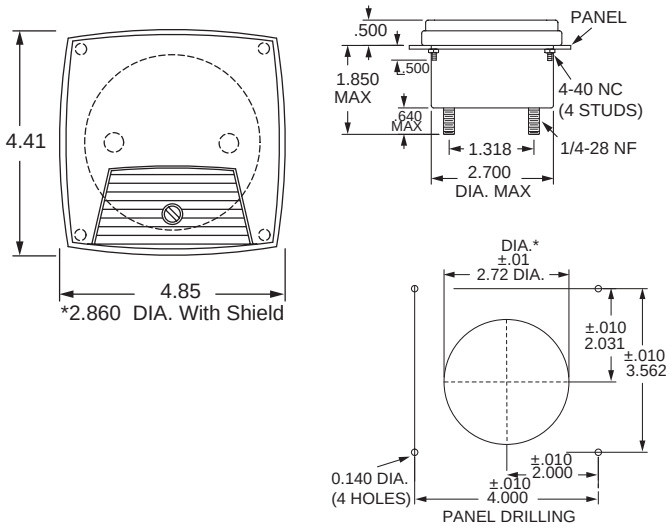

All Dimensions In Inches

FLEX-CORE®
Div. Morlan & Associates, Inc.
4970 Scioto Darby Rd. Hilliard, Ohio 43026
WWW.FLEX-CORE.COM
sales@flex-core.com
PHONE (614) 889-6152
TECH. ASSISTANCE (614) 876-8308
FAX # (614) 876-8538