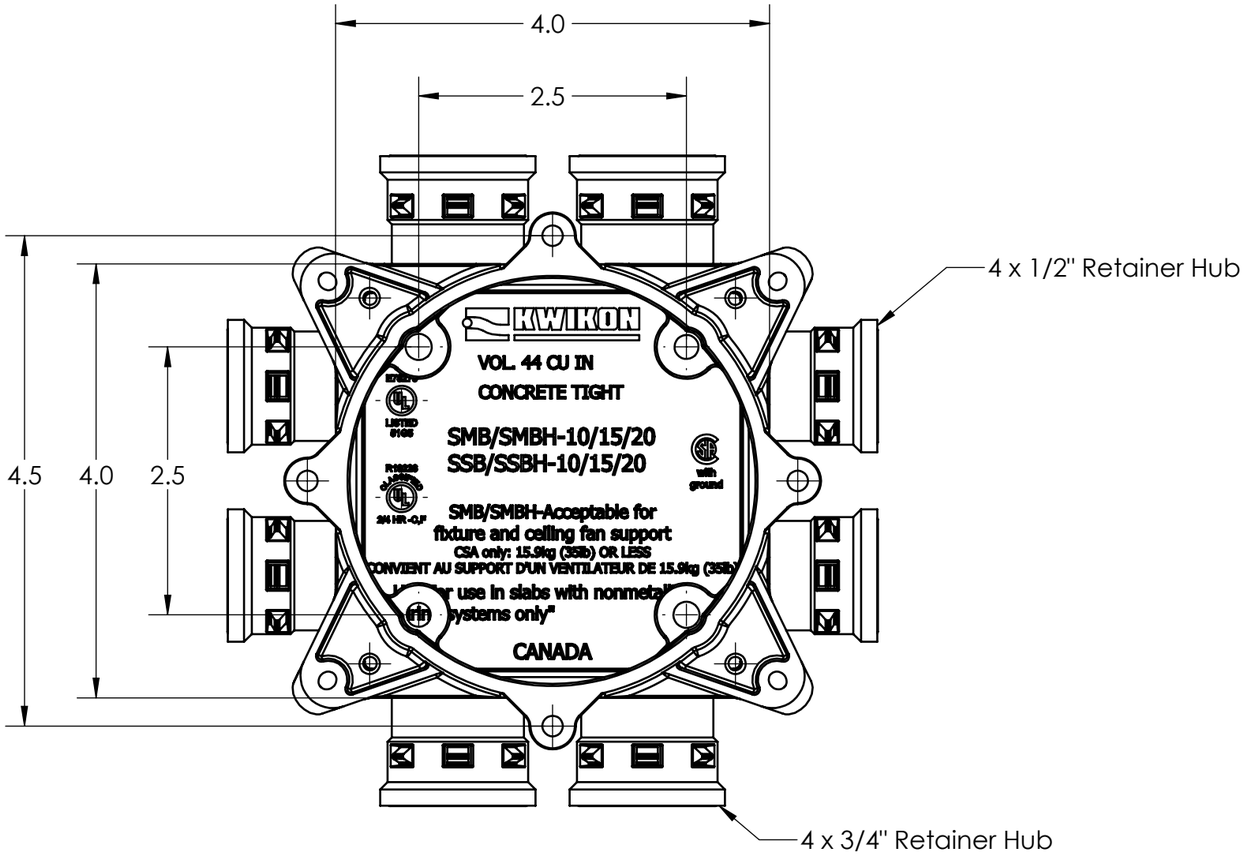

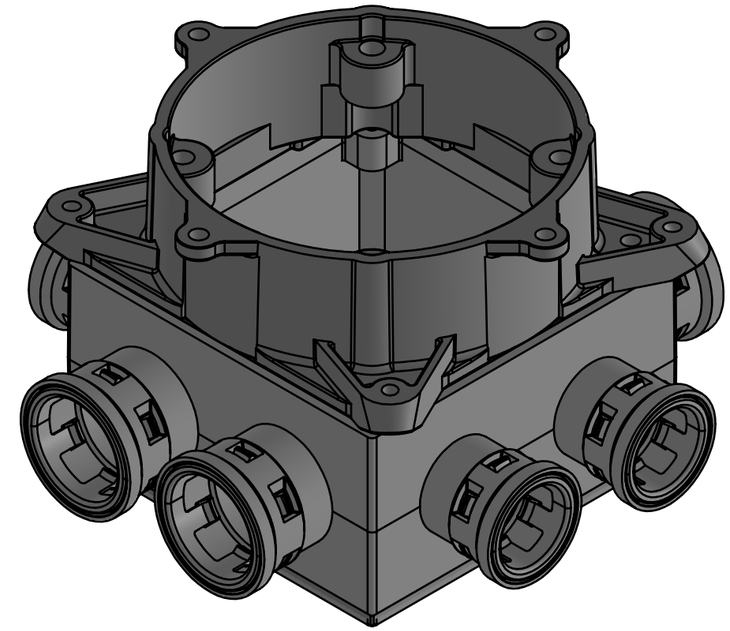

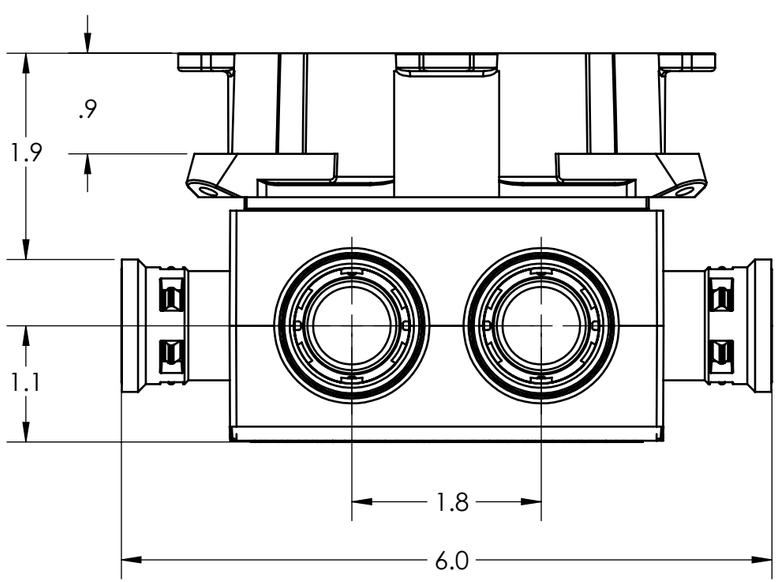

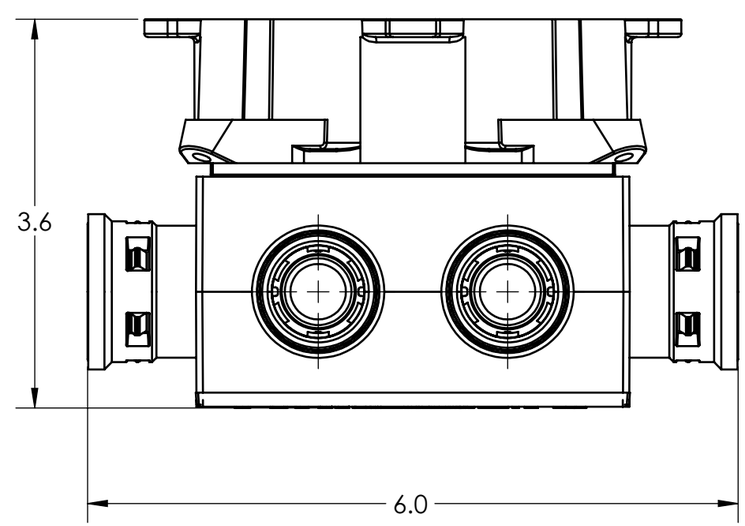

PLASTIC/RUBBER SIZES

SIZES SHOWN ARE FOR REFERENCE
3D MODEL IS TO BE USED FOR
MANUFACTURING / VERIFICATION

ALL CHANGES MUST BE APPROVED AND RECORDED BY ENGINEERING

UNIT: INCHES UNLESS
DUAL DIMENSION: INCH [METRIC]

PROJECTION

IPEX Technologies Inc.

THIS DRAWING AND ALL TECHNICAL INFORMATION APPEARING HEREON ARE PROPERTY OF IPEX TECHNOLOGIES INC. AND MUST BE KEPT IN CONFIDENCE BY THE RECIPIENT. THE SAME MAY NOT BE USED OR REPRODUCED EITHER IN WHOLE OR IN PART WITHOUT THE EXPRESS CONSENT OF IPEX TECHNOLOGIES INC.

TITLE
SMBH1015 PVC SLAB BOX CDN KWIKON

PAPER SIZE ANSI B	NAME	DATE	SCALE: NA
DRAWN		2020-08-28	MAT'L:
APP'D			

PART APPEARANCE: COLOR:

SURFACE FINISHES: (UNLESS OTHERWISE NOTED)
INSIDE:
OUTSIDE:
OTHER:

DIMENSIONS ARE IN INCHES TOLERANCES (UNLESS OTHERWISE SPECIFIED)
FRACTIONAL ± 1/32
X.X ± 0.015
X.XX ± 0.010
X.XXX ± 0.005
ANGULAR ± 1.0

CRITICAL DIMENSIONS ARE SHOWN AS **x.xx**
REFERENCE DIMENSIONS ARE SHOWN WITH REF. NOTE

PRODUCT CODE: 089457

PROJECT No.

FILENAME: FOLDER: