DRAWING NO.
10105635

REV	DATE	DESCRIPTION	ECO	BY	C'H'K.
B	05/05/2017 15:38:00 PM	LOGO UPDATED ..	46677	SM	MB

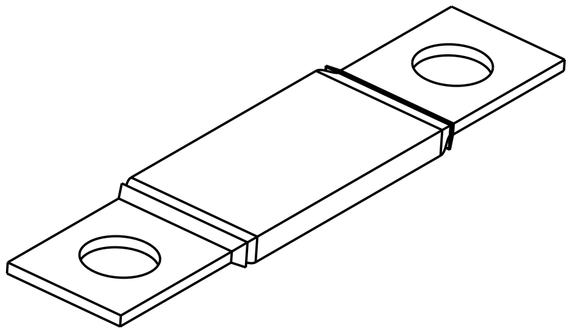

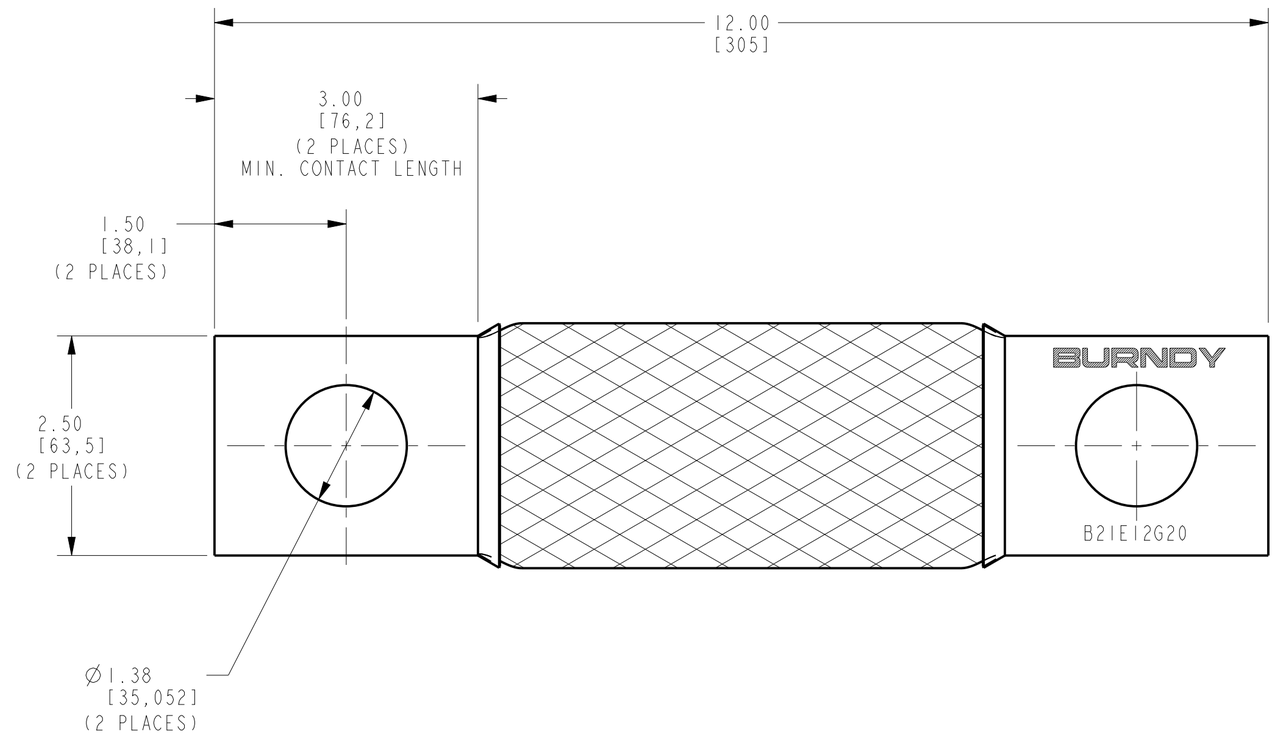

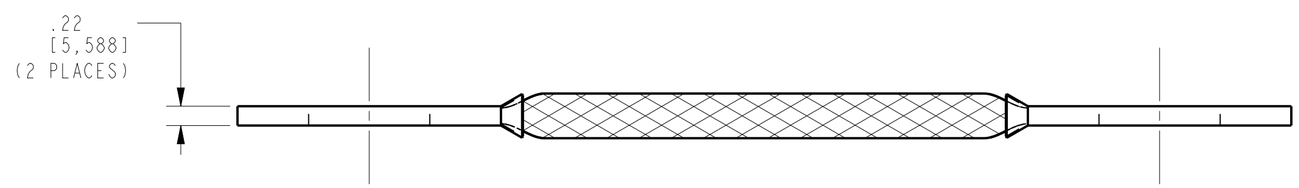

NOTES:

1. DIMENSIONS IN BRACKETS [ ] ARE IN MILLIMETERS ROUNDED OFF TO THE NEAREST MILLIMETER, UNLESS OTHERWISE SPECIFIED, AND ARE FOR REFERENCE ONLY.

2. APPROXIMATE AMP RATING: 580 A
THIS RATING MAY VARY WITH AMBIENT CONDITIONS, ORIENTATION OF THE BRAID AND OTHER SERVICE CONDITIONS.

TO ORDER BURNDY® PRODUCTS CALL

UNITED STATES:
1-800-346-4175 (LONDONDERRY, NH)

CANADA:
1-800-361-6975 (QUEBEC)
1-800-387-6487 (ALL OTHER PROVINCES)

FOR PRODUCT INFO: http://www.burndy.com

BRAID

ITEM NO: 10019748

CAT. NO: B21E12G20

DRAWN BY:	R. BOISVERT	09/08/09
CHECKER:	J. PARKER	09/10/09
DSN APPVL:	J. PARKER	08/20/09
MFG APPVL:	C. MARTINEZ	09/03/09
QA APPVL:	J. BRODEUR	09/01/09
MKT APPVL:	P. THERRIEN	08/20/09

BURNDY

SCALE: 3:4

PROD FAM: --

PROJECT #: --

DOCUMENT TYPE: Sales

REL LEVEL: Released

SIZE: C

DRAWING NO: 10105635

REV: B

SHEET 1 OF 1

REV: PE0200