REV	DATE	DESCRIPTION	ECO	BY	C'H'K.
A	10/26/2020	NEW DRAWING CREATED	54292	SS	PB

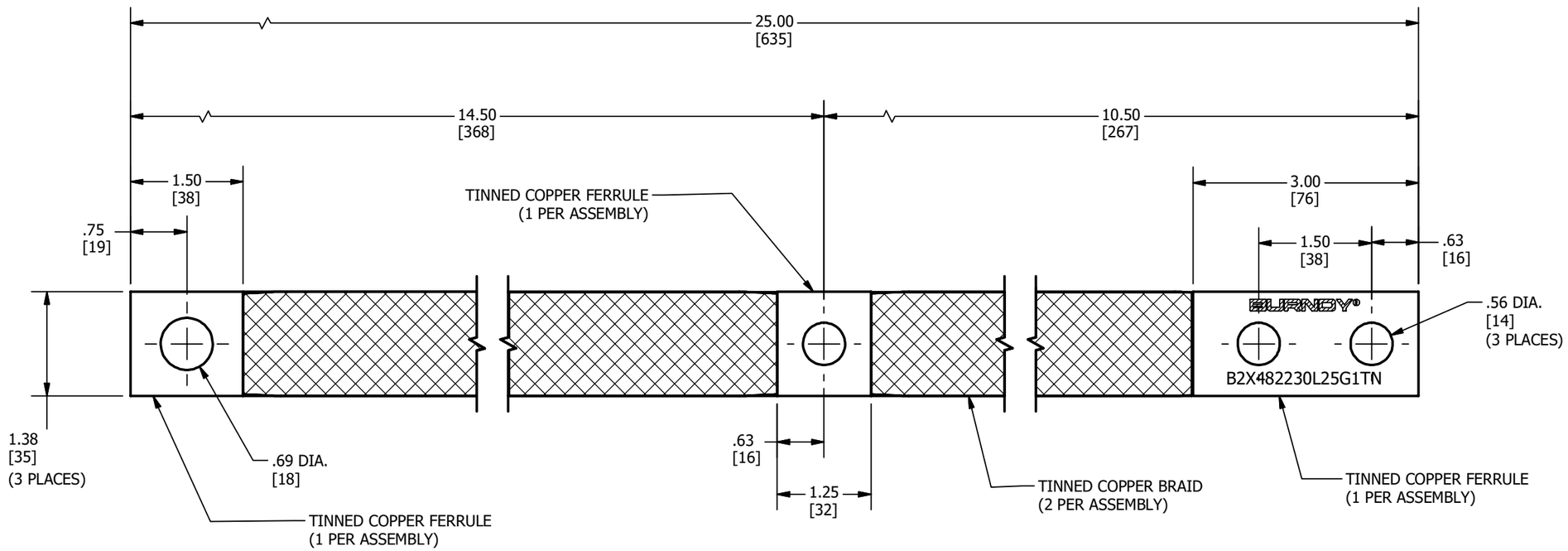

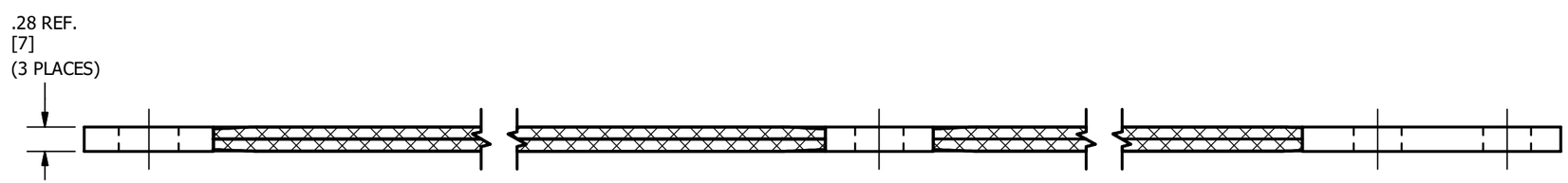

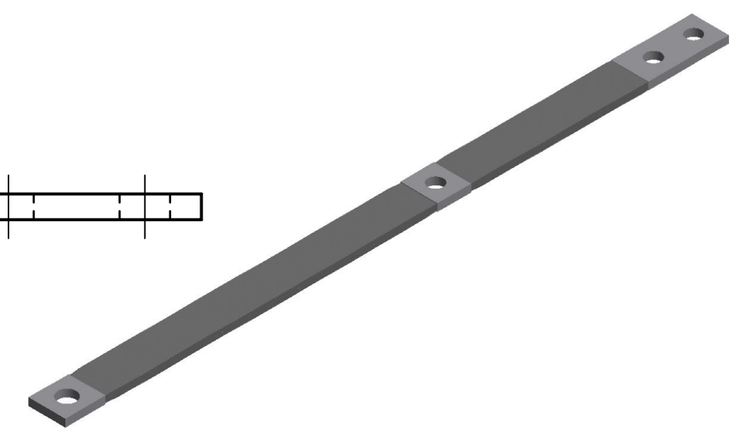

NOTES:

1. MATERIAL:
   FERRULE : TIN PLATED COPPER
   BRAID : TIN PLATED COPPER

2. DIMENSIONS IN BRACKETS [ ] ARE IN MILLIMETERS ROUNDED OFF TO THE NEAREST MILLIMETER, UNLESS OTHERWISE NOTED, AND ARE FOR REFERENCE ONLY.

TO ORDER BURNDY® PRODUCTS CALL

UNITED STATES
1-800-346-4175 (LONDONDERRY, NH)

CANADA:
1-800-361-6975 (QUEBEC)
1-800-387-6487 (ALL OTHER PROVINCES)

FOR PRODUCT INFO: http://www.burndy.com

BRAID

ITEM NO: 332984

CAT. NO: B2X482230L25G1TN

DRAWN BY:	M.SAURABH	10/26/2020
CHECKER:	S.CARBONNEAU	02/16/2021
DSN APRVL:	S.CARBONNEAU	02/16/2021
MFG APRVL:	--	
QA APRVL:	G.REDFIELD	11/12/2020
MKT APRVL:	K.ROBICHEAU	02/23/2021
PROD FAM:	MECHANICAL GROUNDING	
PROJECT #:	--	
DOCUMENT TYPE:	SALES	
REL LEVEL:	Released	

BURNDY®

SIZE	DRAWING NO	REV
B	50115860	A
	SHEET 1 OF 1	