REV	DATE	DESCRIPTION	ECO	BY	C'H'K.
A	11/12/2012	SALES DRAWING FOR CAT # B22F12G18W	29539	PM	MB

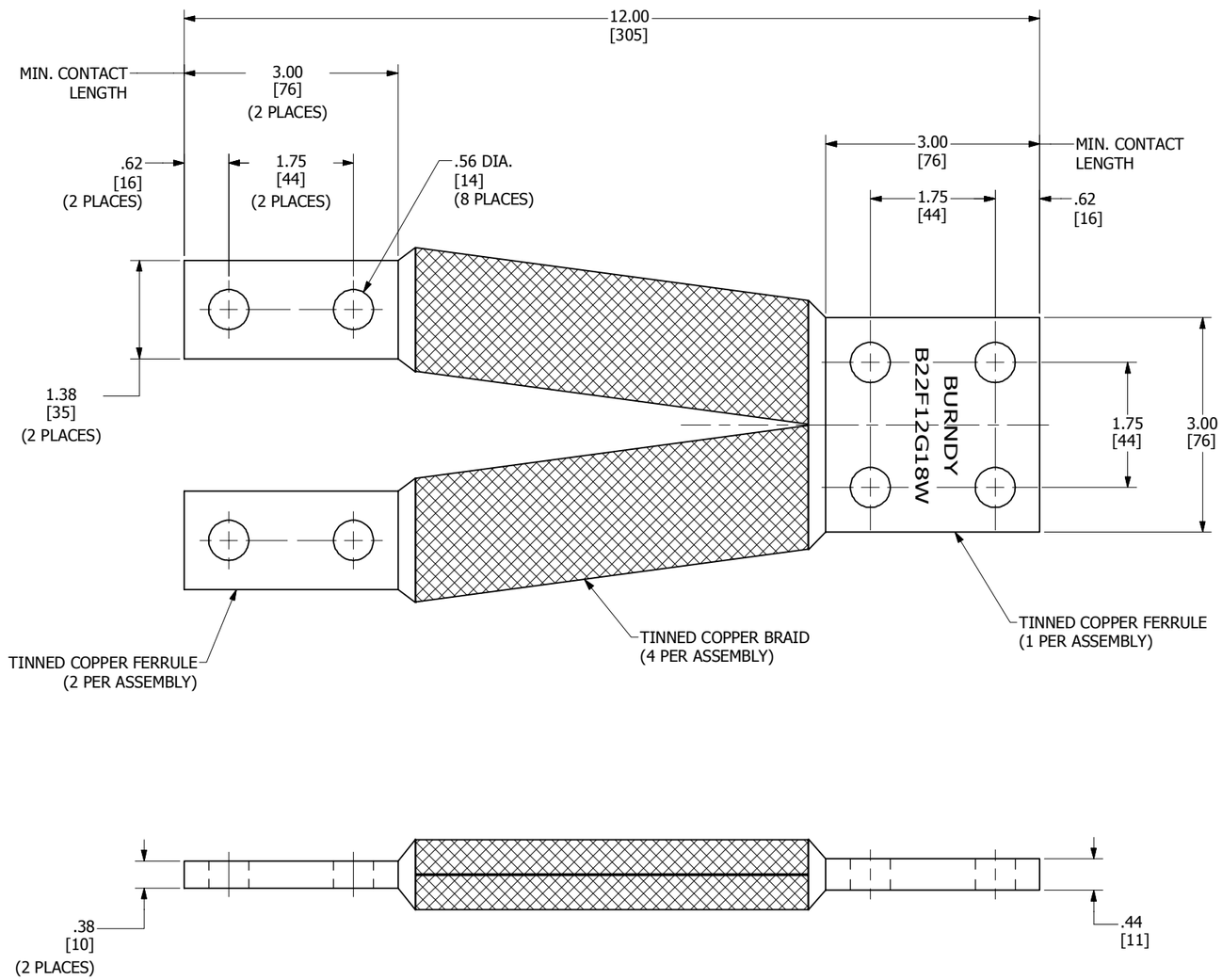

NOTES:

1. APPROXIMATE AMP RATING : 600A INDOOR, 720A OUTDOOR. THIS RATING MAY VARY WITH AMBIENT CONDITIONS, ORIENTATION OF THE BRAID, AND OTHER SERVICE CONDITIONS.
2. DIMENSIONS IN BRACKETS [ ] ARE IN MILLIMETERS ROUNDED OFF TO THE NEAREST MILLIMETER, UNLESS OTHERWISE NOTED, AND ARE FOR REFERENCE ONLY.
3. MATERIAL : COPPER

TO ORDER BURNDY® PRODUCTS CALL

UNITED STATES
1-800-346-4175 (LONDONDERRY, NH)

CANADA:
1-800-361-6975 (QUEBEC)
1-800-387-6487 (ALL OTHER PROVINCES)

FOR PRODUCT INFO: http://www.burndy.com

BRAID

ITEM NO: 10011020

CAT. NO: B22F12G18W

DRAWN BY:	PALANI M	11/12/2012
CHECKER:	--	
DSN APRVL:	--	
MFG APRVL:	--	
QA APRVL:	BRODEUR, JOE	04/11/2013
MKT APRVL:	BAILLY, MICHAEL	04/11/2013
PROD FAM:	--	
PROJECT #:	--	
DOCUMENT TYPE:	SALES	
REL LEVEL:	Released	

BURNDY®

SIZE: D

DRAWING NO: 50014374

REV: A

SHEET 1 OF 1