DRAWING NO.
10032330

REV.	DATE	DESCRIPTION	ECO	BY	C'K'D.
E	12/22/16	UPDATE LOGO .	45595	RB	PW

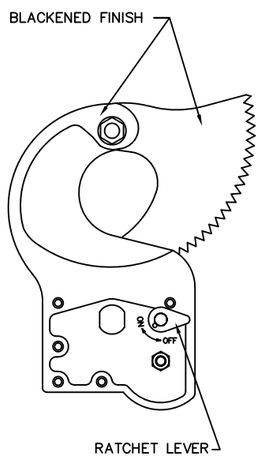

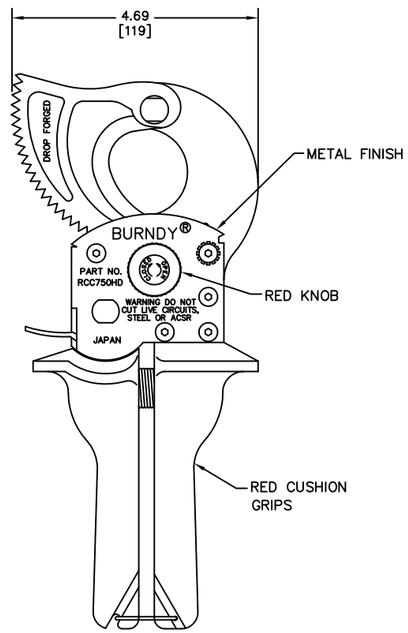

HANDLES SHOWN IN CLOSED POSITION

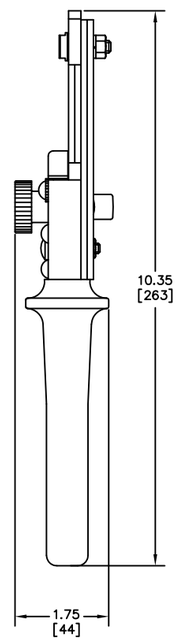

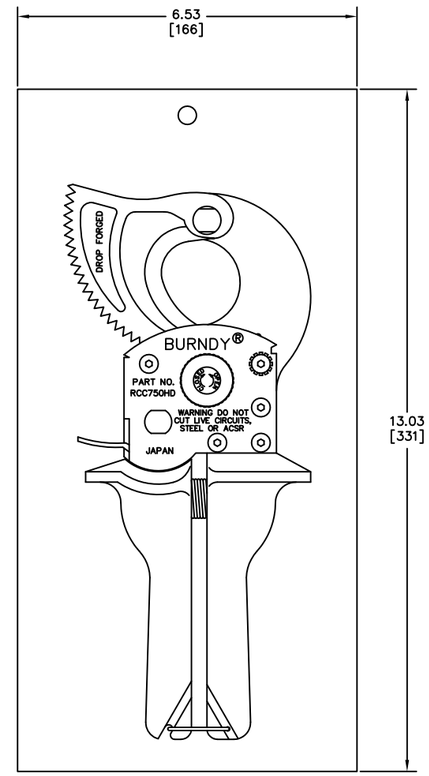

TOOL SHOWN IN BLISTER PACK
FOR REFERENCE ONLY

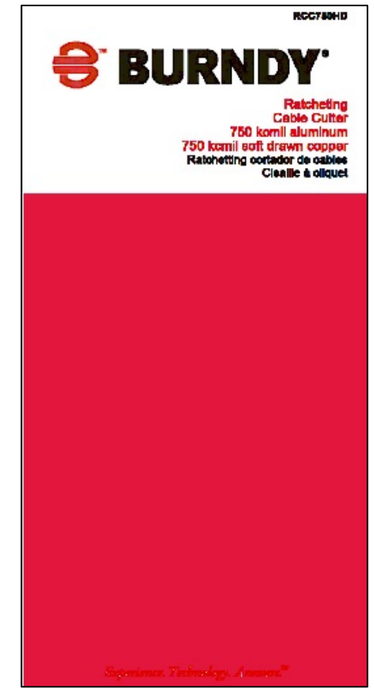

FRONT

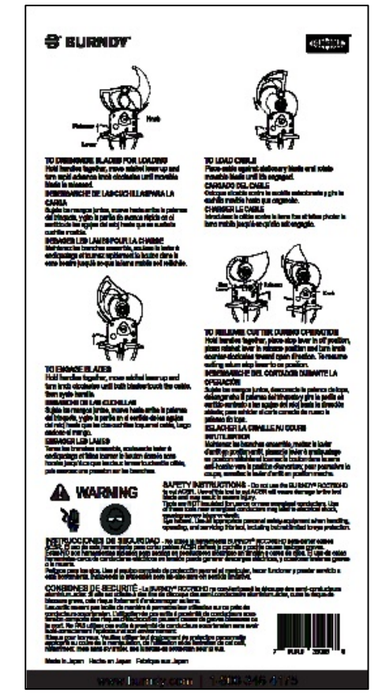

BACK

NOTES:

1. READ AND FOLLOW ALL INSTRUCTIONS PROVIDED BEFORE USING THIS TOOL.
2. DIMENSIONS IN BRACKETS [ ] ARE IN MILLIMETERS ROUNDED OFF TO THE NEAREST MILLIMETER, UNLESS OTHERWISE NOTED, AND ARE FOR REFERENCE ONLY.

SPECIFICATIONS:

TOOL CUTS UP TO: 750 CU./AL. FOR OCCASIONAL USE OR 500 CU. 750 AL. FREQUENTLY.
WEIGHT: 2.56 LBS.
JAWS: HIGH STRENGTH FORGED STEEL.
HANDLES: COMFORT GRIP DESIGN.

TO ORDER BURNDY® PRODUCTS CALL

UNITED STATES:
1-800-346-4175 (LONDONDERRY, NH)

CANADA:
1-800-361-6975 (QUEBEC)
1-800-387-6487 (ALL OTHER PROVINCES)

FOR PRODUCT INFO: http://www.burndy.com

RATCHET CABLE CUTTER

ITEM NO: 10029646

CAT NO: RCC750HD

SCALE:	N/A	
DRAWN BY:	P. LAPONIUS	07/31/03
CHECKER:	J. AYER	08/22/03
DSN APPVL:	J. AYER	08/21/03
MFG APPVL:	--	--
QC APPVL:	J. BRODEUR	08/26/03
MKT APPVL:	A. ZWIT	08/21/03
PROD FAM:	--	
PROJECT #:	--	
DOCUMENT TYPE:	--	
REL LEVEL:	--	

BURNDY

DRAWING NO	REV
10032330	E

SIZE: D

SHEET 1 OF 1