Steel City

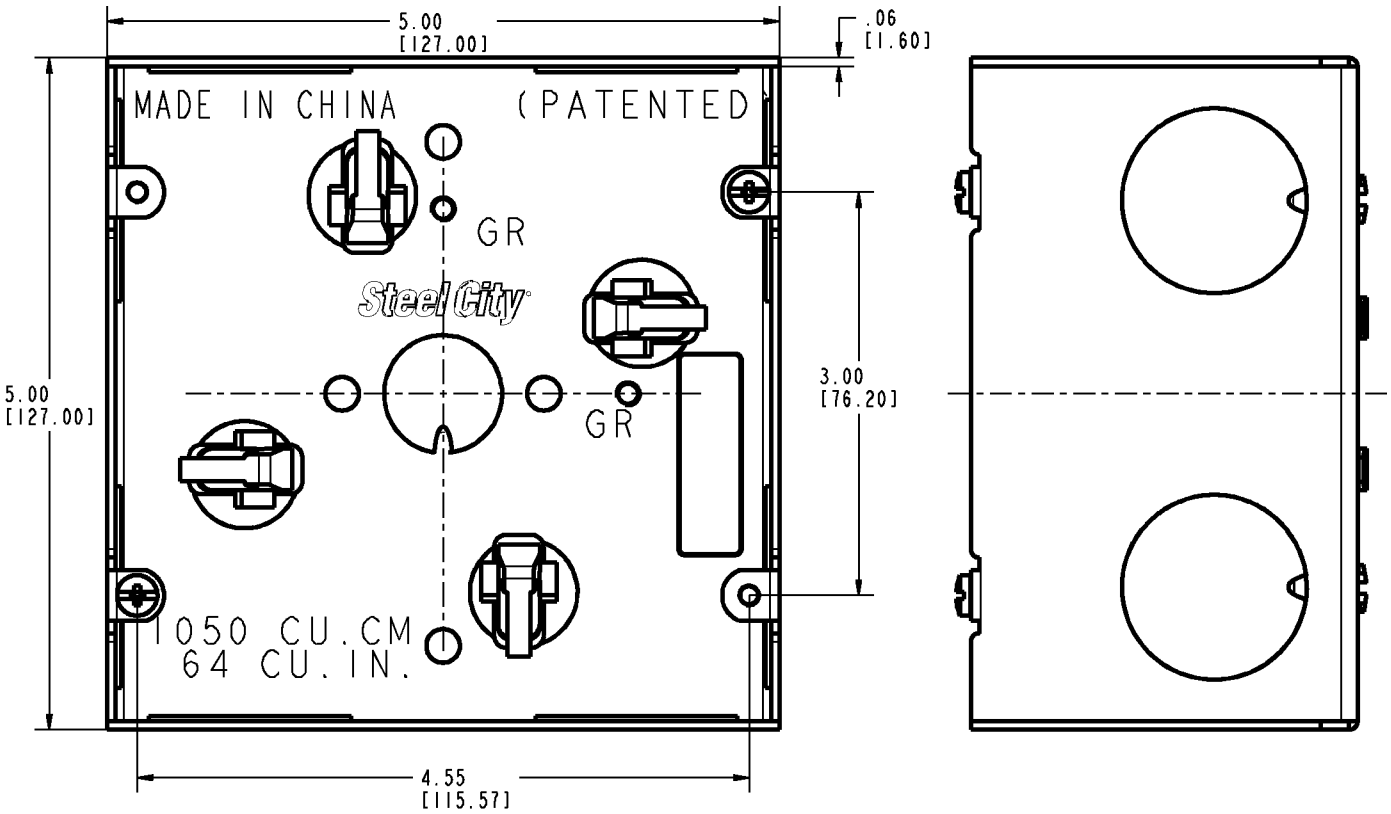

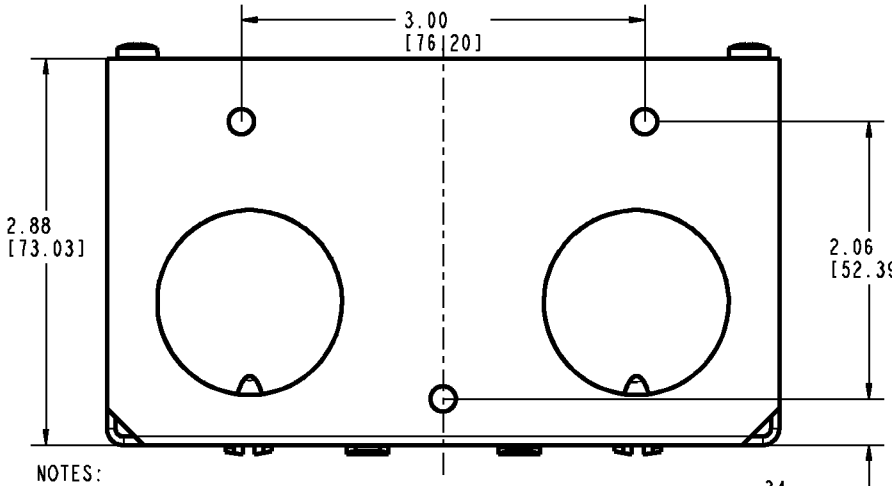

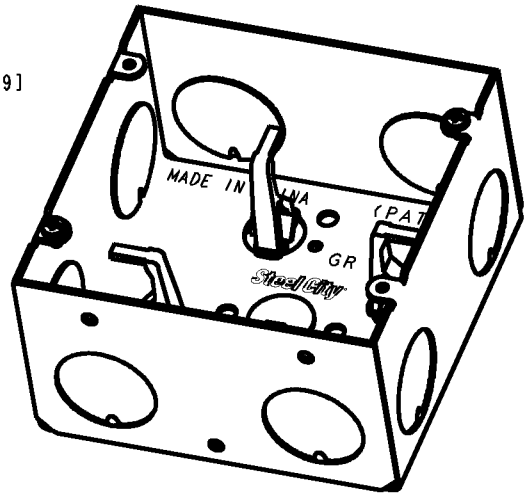

NOTES:

1. CAT. NO. 8218IT-1
2. MATERIAL: .063 PRE-GALVANIZED STEEL OR STEEL ELECTRO GALV. ZINC
3. INCLUDES TWO #8-32 X 3/8 LONG COVER SCREWS.
4. INCLUDES TWO 1" KNOCKOUTS ON FOUR SIDES.
5. INCLUDES FOUR CABLE MANAGENMENT INSERTS.

GENERAL NOTES

1. ALL DIMENSIONS ARE FOR REFERENCE ONLY.
2. DIMENSIONS IN BRACKETS [ ] ARE IN METRIC UNITS.

REVISIONS

- SEE ERN (****) FOR APPROVAL SIGNATURES & RELEASE DATE. PROJECT NO: ****

www.tnb.com

Thomas&Betts
A Member of the ABB Group

DESCRIPTION:

5 SQUARE TELECOMMUNICATIONS OUTLET BOX

ORIGINAL PROJECT NO / (ERN NO)	SHEET NO:	REV. NO:	DRAWING NO:
001P000414 / (2014664)	1 OF 1	-	WSD-001172

THIS DRAWING IS INTENDED FOR DESCRIPTIVE PURPOSES ONLY. AND THE RIGHT IS RESERVED TO DEVIATE FROM ANY OF THE DETAILS SHOWN HEREON.
COPYRIGHT THOMAS & BETTS CORPORATION. ALL RIGHTS RESERVED. PROPRIETARY AND CONFIDENTIAL.