nVent HOFFMAN

1	10-32x.25
	1-6X

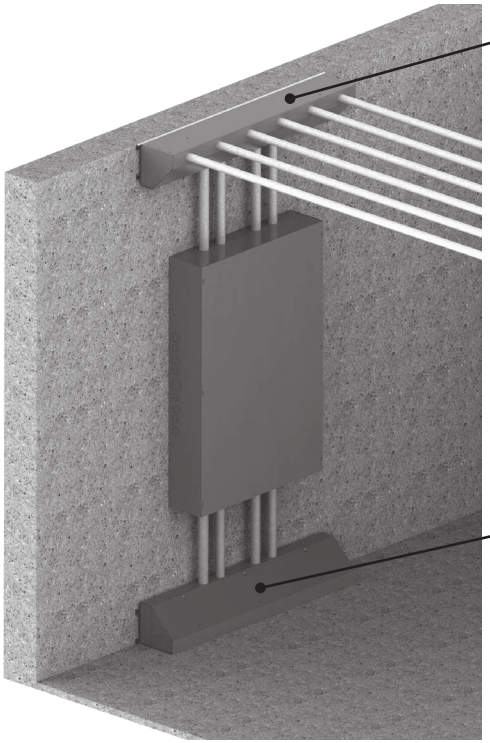

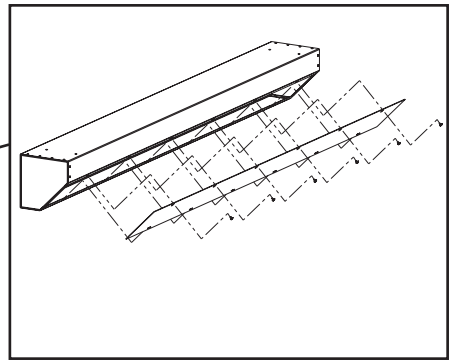

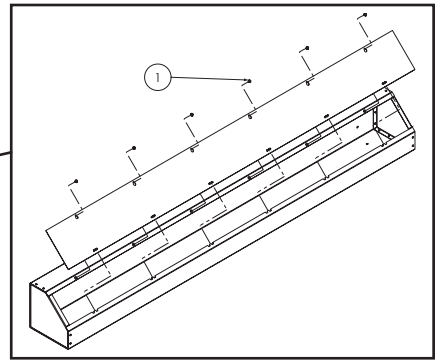

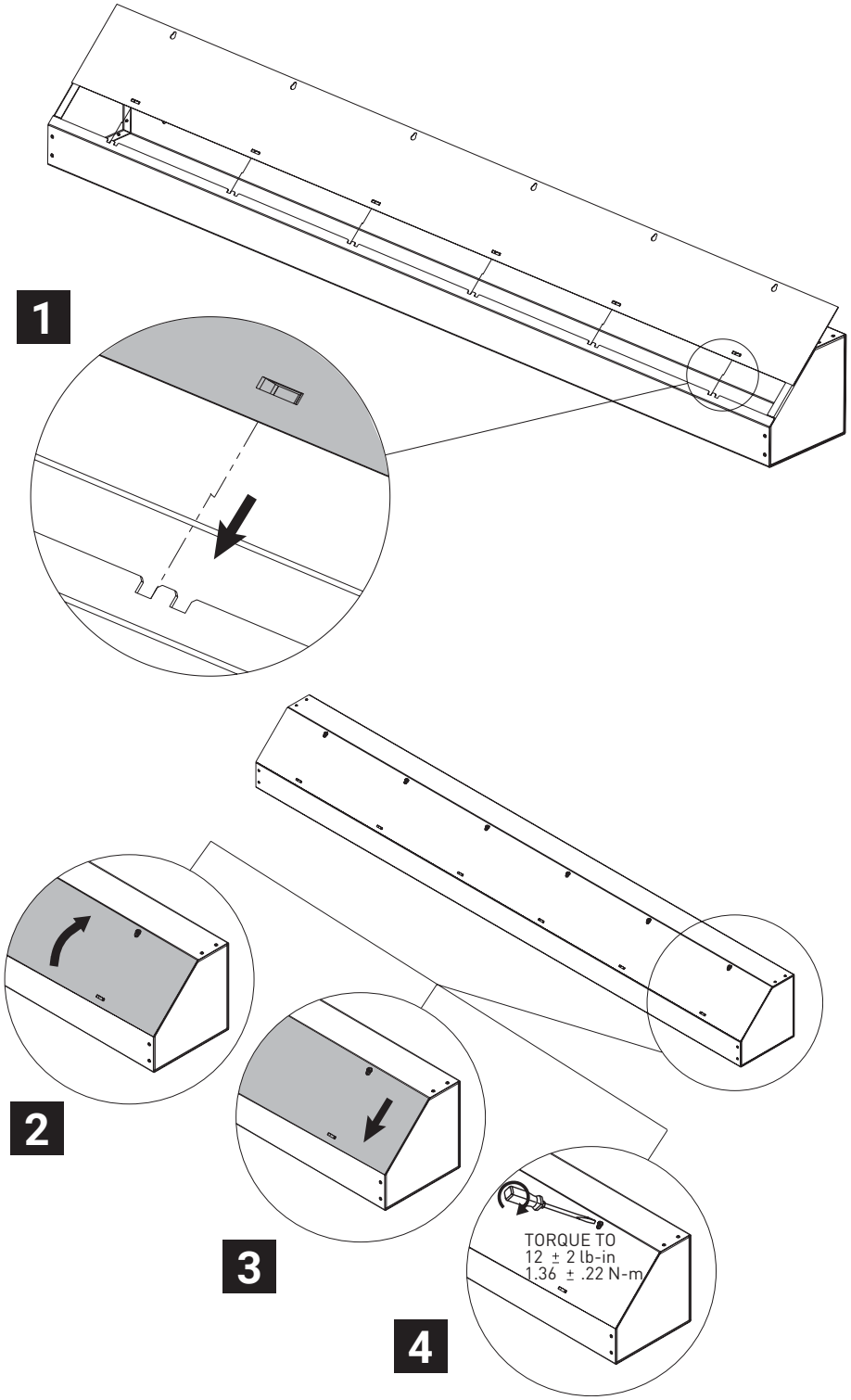

© 2018 Hoffman Enclosures Inc.