TOP VIEW

SIDE VIEW

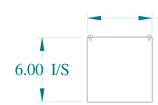

FRONT VIEW

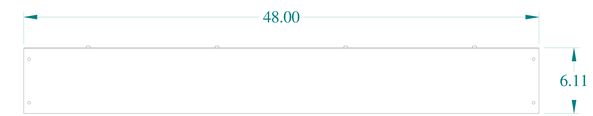

SIDE VIEW

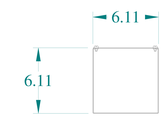

BACK VIEW

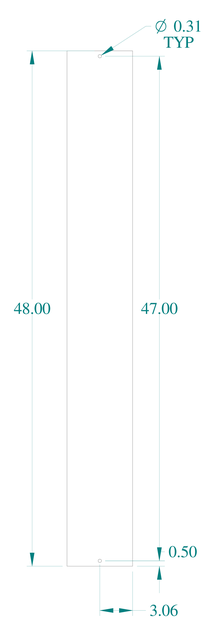

BOTTOM VIEW

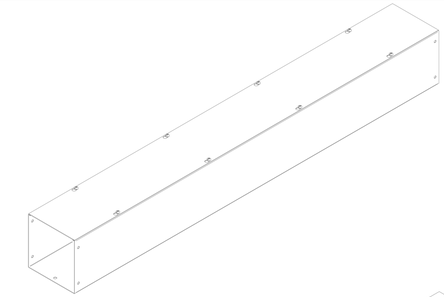

ISOMETRIC VIEWS

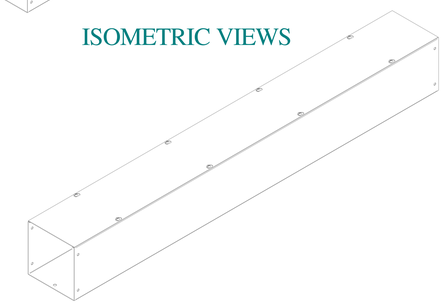

HAMMOND MANUFACTURING®

www.hammondmfg.com

Data subject to change without notice.

Part # : CWSC648NK	Date : Mar. 24, 2019

Link:www.hammfg.com/CWSC648NK