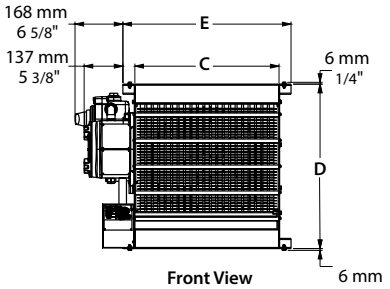
168 mm
6 5/8"
137 mm
5 3/8"
E
C
6 mm
1/4"
D
6 mm
1/4"
Front View
Optional built-in
disconnect switch
279 mm
11"
Louvers
36 mm max.
1 3/8" max.
F
86 mm
3 3/8"
Optional
explosion-proof
built-in thermostat
Side View

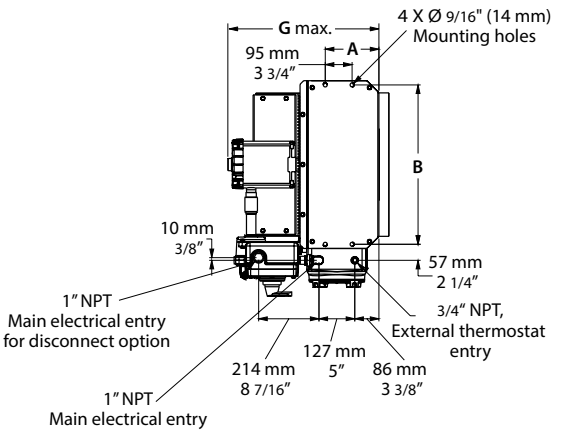
G max.
4 X Ø 9/16" (14 mm)
Mounting holes
95 mm
3 3/4"
A
B
10 mm
3/8"
57 mm
2 1/4"
1" NPT
Main electrical entry
for disconnect option
3/4" NPT,
External thermostat
entry
127 mm
5"
214 mm
8 7/16"
86 mm
3 3/8"
1" NPT
Main electrical entry
no disconnect fitted
Top View