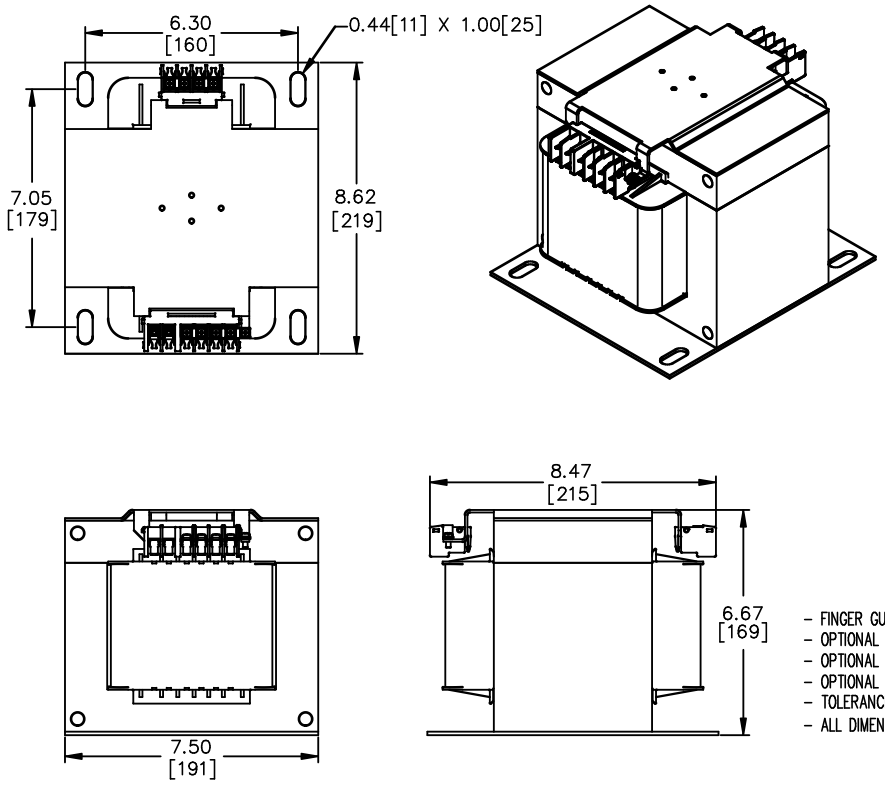

- FINGER GUARDS FOR TERMINAL BLOCKS AND FUSING OPTIONAL
- OPTIONAL FUSE CLIPS WITH FINGER GUARDS WILL ADD 0.13"[3mm] TO HEIGHT
- OPTIONAL FUSE BLOCK WILL ADD 1.3"[33mm] TO HEIGHT
- OPTIONAL FUSE BLOCK WITH FINGER GUARD WILL ADD 1.5"[38mm] TO HEIGHT
- TOLERANCES STD. +/- 0.1"[+/-3mm]
- ALL DIMENSIONS ARE IN INCHES [mm]

NOTES:

hammond POWER SOLUTIONS

TITLE: 1 PHASE GENERAL PURPOSE CONTROL TFX

NO.	DATE	BY	REVISION

DES: MSARAF
DATE: 25/06/14
SCALE: NTS

SHEET 1 OF 1

EDBC2G3000ACP

0.2 rharish 2025/07/11 16:56