Day-Brite CFI

Industrial

HCY Round High Bay

Dual Select (8,000 to 38,000lm)



Project:

Location:

Cat.No:

Type:

Qty:

Notes:

The Day-Brite / CFI HCY sealed high bay is an ideal choice where functional high bay lighting is needed with an aesthetic appeal. The round form factor lends itself to retail and institutional applications.

Correlated Color Temperatures

Lumen Select Switch

UN3 Universal 120-347V

Ordering guide

Example: HCY0824L8CST-UN3-DIM-BST-BK

Series	Lumens[1] (nominal)	Color (CRI/CCT)	Voltage	Options	Optics	Finish
HCY		8CST	UN3	DIM	BST	
HCY Round High Bay LED dual select	**0824L** 8,000/14,000/24,000lm **2438L** 24,000/32,000/38,000lm	**8CST** 80 CRI, Color Select (3500/4000/5000K)	**UN3** Universal voltage 120-347V	**DIM** 0-10V dimming	**BST** Selectable Beam Spread 60° / 90° (± 10°)	**BK** Black **WH** White

1. Nominal delivered lumens at 25°C ambient.

Note: Many luminaire components, such as reflectors, lenses, sockets, lampholders, and LEDs are made from various types of plastics which can be adversely affected by airborne contaminants. If sulfur based chemicals, petroleum based products, cleaning solutions, or other contaminants are expected in the intended area of use, consult factory for compatibility.

Accessories (order separately)

Cat Code	Description
IHB-EM-DVR-40W-WH	Emergency LED Driver 40W White
IHB-EM-DVR-40W-BK	Emergency LED Driver 40W Black
HCY4-LCSMLG	Clear polycarbonate lens cover for HCY4
HCY4-PRLG	Clear polycarbonate reflector HCY2438L
HCY4-PRSM	Clear polycarbonate reflector HCY0824L
HCY4-WGLG	Wire guard for HCY2438L
HCY4-WGSM	Wire guard for HCY0824L
HCY4-REMOTE	Round Highbay DS Remote 4 Sensor program
HCY4-SENSOR	Round Highbay DS Sensor
HCY-SURFACE-BKT-LG	Surface mount bracket for HCY2438L
HCY-SURFACE-BKT-SM	Surface mount bracket for HCY0824L


Reflector


Bracket


Sensor


Remote


Wireguard


Lens Cover

Features

- Die cast frame and driver containment housing.
- Corrosion resistant black and white finish.
- Clear polycarbonate lens protects LEDs.
- Heavy duty hook provided for connection to customer-supplied suspension.
- Driver surge protection is 4kV L-N and 6kV LN-GND.
- Lumen maintenance up to 70% (L70) at 50,000 hrs.
- Default HCY4-SENSOR settings are 1 minute timeout to 20% dim level, then 1 minute timeout to off. HCY4-REMOTE must be used to change default sensor settings.
- HCY4-SENSOR may be used up to 50ft mounting height.
- Note that using the sensor together with the reflector will affect sensor performance.
- Exposed leads for wiring connection with sleeving for environmental protection.
- 6' cord provided for power connection and dimming connection.
- Field CCT and Lumen selectable.
  - Default CCT setting is 4000K.
  - Default lumen setting for small is 24000lm.
  - Default lumen setting for large is 38000lm.
- Field Selectable Optics - 60° / 90° selectable (±10°)
- cULus listed for use in wet locations for -30°C to 50°C ambient.
- • IP65 and NEMA4X rated. IK08 impact rated.
- Components are RoHS compliant.
- DesignLights Consortium qualified. Please see the DLC QPL list for exact catalog numbers (www.designlights.org/QPL)
- Five year limited luminaire warranty. Visit www.signify.com/warranties for complete warranty information.

HCY Round High Bay

Dual Select (8,000 to 38,000lm)



150W Dimensions

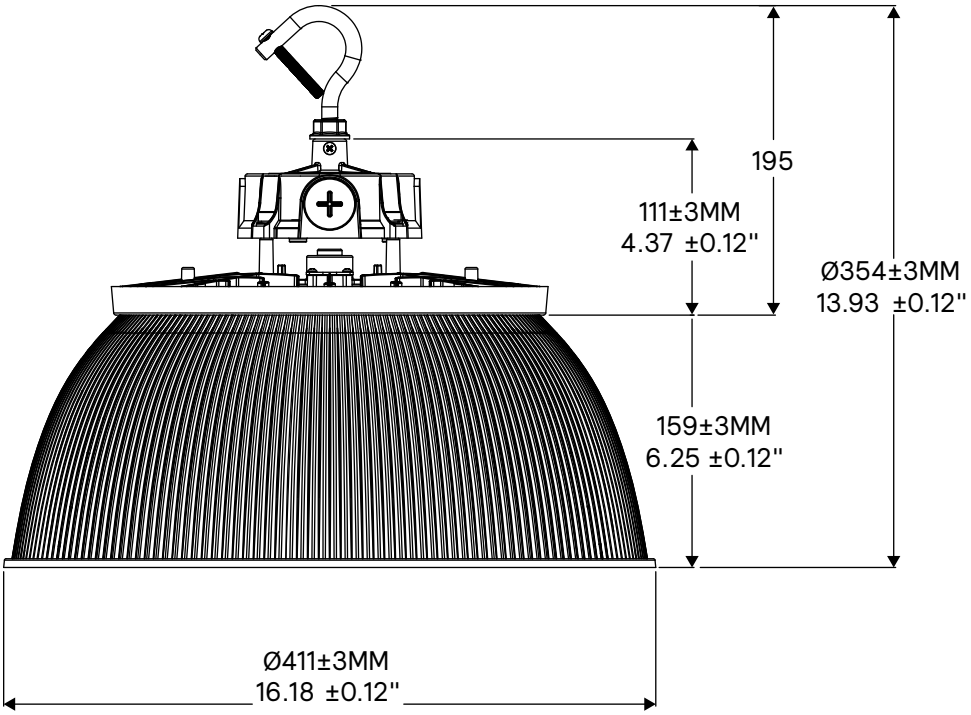

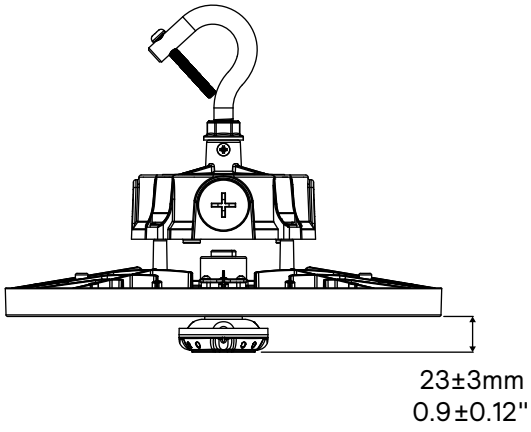

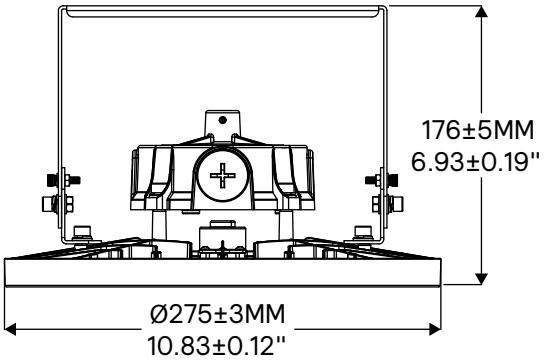

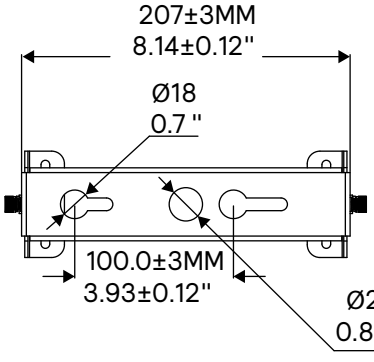

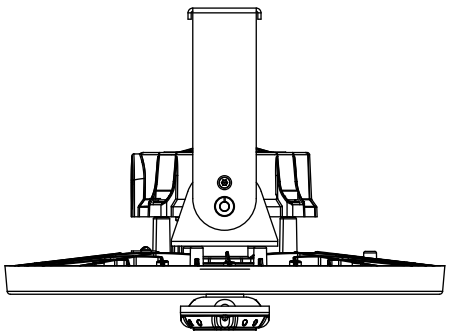

HCY Round High Bay

Dual Select (8,000 to 38,000lm)



240W Dimensions

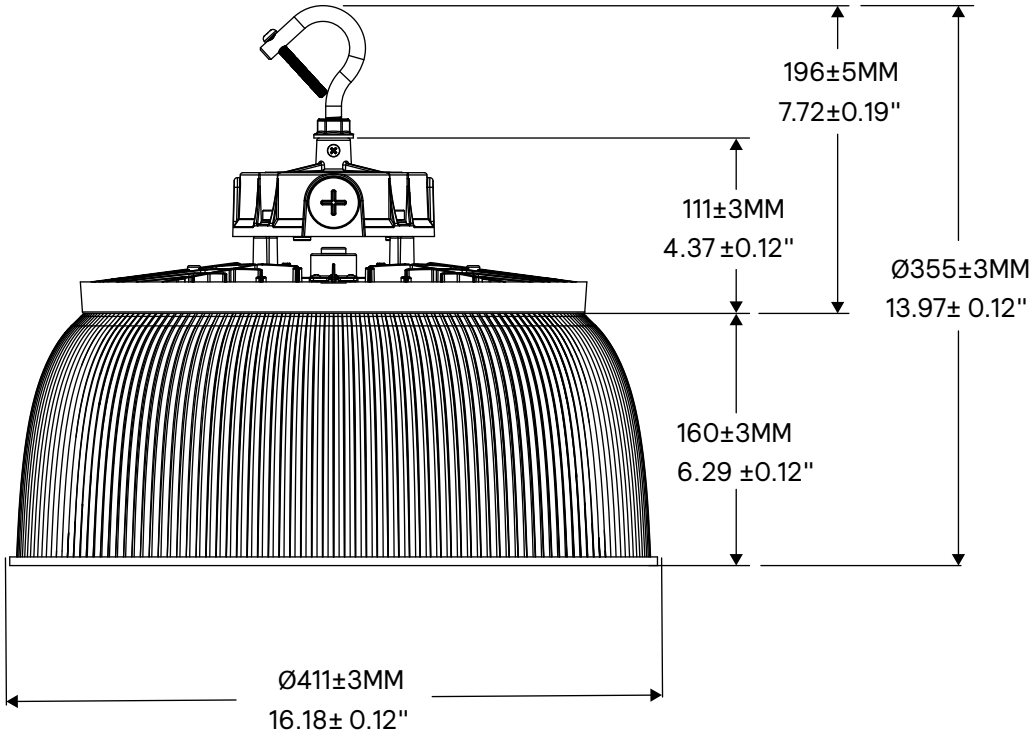

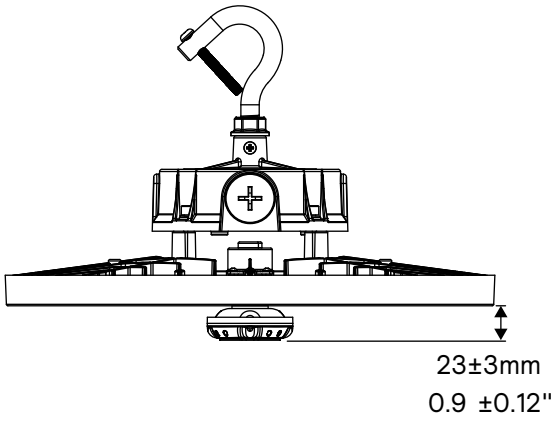

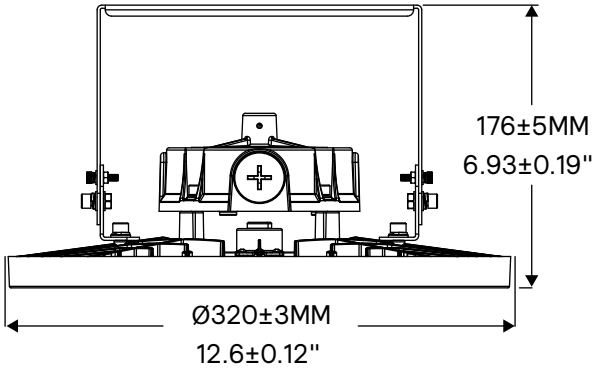

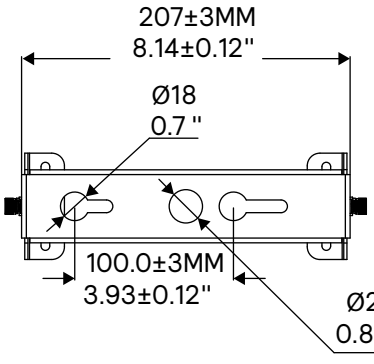

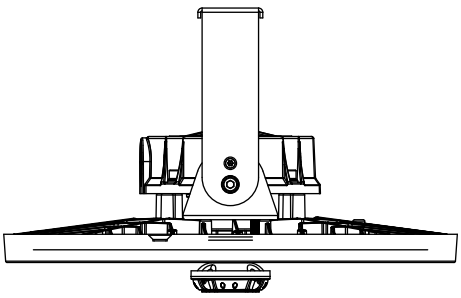

HCY Round High Bay

Dual Select (8,000 to 38,000lm)

Photometry

HCY 150W 3500K 60 DEG

Luminaire Lumens	23320
Luminaire Efficacy Rating (LER)	156
Total Luminaire Watts	149
Spacing Criterion (0–180)	0.9
Spacing Criterion (90–270)	0.92

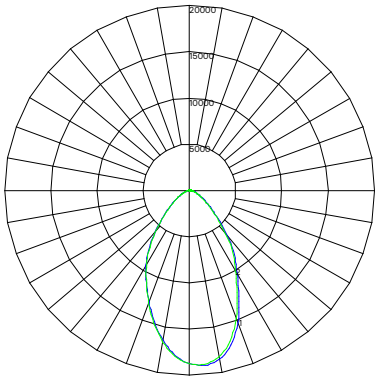

Candela Distribution						Flux
	0	22.5	45	67.5	90	Lumens
0	18778	18778	18778	18778	18778	
5	18766	18919	19012	19021	18896	1732
15	16530	16981	17285	17322	16913	4433
25	11864	12238	12569	12642	12172	5364
35	7868	8105	8304	8422	8117	4893
45	4184	4276	4349	4379	4236	3285
55	2066	2112	2152	2167	2110	1904
65	964	989	1020	1034	1021	1003
75	385	401	420	430	437	444
85	46	54	54	72	79	94
90	23	23	18	21	26	

Zonal Lumen Summary		
Zone	Lumens	%Fixture
0-20	6165	26
0-30	11530	49
0-40	16423	70
0-60	21612	93
0-80	23059	99
0-90	23153	99
90-180	167	1
0-180	23320	100

Avg. Luminance (cd/m²)			
	0	45	90
45	134070	139362	135746
55	81625	85017	83350
65	51688	54666	54741
75	33715	36746	38234
85	11928	14005	20494

Coefficients of Utilization % (Based on a floor reflectance of 0.2)

Pc---		80				70			50			0
Pw---		70	50	30	10	70	50	30	50	30	10	0
RCR	0	118	118	118	118	115	115	115	109	109	109	96
	1	107	102	97	93	104	99	95	94	91	88	79
	2	97	89	82	76	94	86	80	82	77	72	65
	3	89	78	69	63	86	76	68	72	66	60	55
	4	81	69	60	53	78	67	59	64	57	51	47
	5	74	62	52	46	72	60	52	58	50	44	40
	6	69	55	46	40	67	54	46	52	45	39	35
	7	64	50	41	35	62	49	41	47	40	34	31
	8	59	46	37	32	58	45	37	43	36	31	28
	9	56	42	34	28	54	41	34	40	33	28	25
	10	52	39	31	26	51	38	31	37	30	25	23

HCY 150W 3500K 90 DEG

Luminaire Lumens	22449
Luminaire Efficacy Rating (LER)	148
Total Luminaire Watts	152
Spacing Criterion (0–180)	1.24
Spacing Criterion (90–270)	1.28

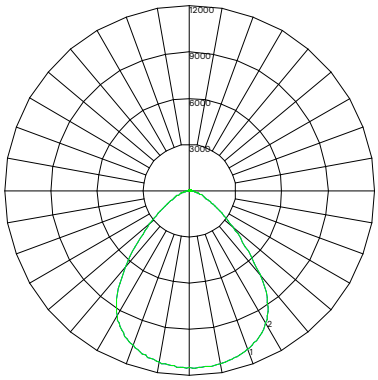

Candela Distribution						Flux
	0	22.5	45	67.5	90	Lumens
0	11498	11498	11498	11498	11498	
5	11464	11477	11482	11487	11493	1090
15	11158	11215	11252	11251	11251	3145
25	10373	10521	10599	10629	10566	4758
35	8547	8780	8955	9052	8852	5275
45	5076	5182	5257	5291	5141	3938
55	2475	2548	2594	2625	2563	2295
65	1135	1165	1200	1216	1213	1181
75	437	454	471	486	495	502
85	51	54	55	64	84	99
90	25	20	21	21	29	

Zonal Lumen Summary		
Zone	Lumens	%Fixture
0-20	4235.44	18.9
0-30	8993.42	40.1
0-40	14268.18	63.6
0-60	20501.52	91.3
0-80	22184.61	98.8
0-90	22283.37	99.3
90-180	166	0.7
0-180	22449	100

Avg. Luminance (cd/m²)			
	0	45	90
45	162664	168455	164726
55	97769	102482	101247
65	60855	64363	65029
75	38300	41276	43314
85	13144	14244	21765

Coefficients of Utilization % (Based on a floor reflectance of 0.2)

Pc---		80				70			50			0
Pw---		70	50	30	10	70	50	30	50	30	10	0
RCR	0	119	119	119	119	116	116	116	111	111	111	99
	1	111	107	104	101	108	105	102	101	98	96	88
	2	103	96	91	86	101	95	90	91	87	83	77
	3	96	87	80	75	93	85	79	82	77	73	68
	4	89	79	71	66	87	77	70	75	69	64	60
	5	82	71	64	58	80	70	63	68	62	57	54
	6	77	65	57	52	75	64	57	63	56	51	48
	7	72	60	52	47	70	59	52	57	51	46	44
	8	67	55	47	42	66	54	47	53	47	42	40
	9	63	51	44	39	62	50	43	49	43	38	36
	10	59	47	40	35	58	47	40	46	39	35	33

Catalog No.	Delivered Lumens	Input Watts	Efficacy
HCY0824L8CST-UN3-DIM	8000	50	160
HCY0824L8CST-UN3-DIM	14000	90	156
HCY0824L8CST-UN3-DIM	23000	150	153
HCY2438L8CST-UN3-DIM	24000	150	160
HCY2438L8CST-UN3-DIM	33000	210	157
HCY2438L8CST-UN3-DIM	37000	240	154

HCY Round High Bay

Dual Select (8,000 to 38,000lm)

Photometry

HCY 240W 3500K 60 DEG

Luminaire Lumens	37391
Luminaire Efficacy Rating (LER)	162
Total Luminaire Watts	230
Spacing Criterion (0–180)	0.9
Spacing Criterion (90–270)	0.9

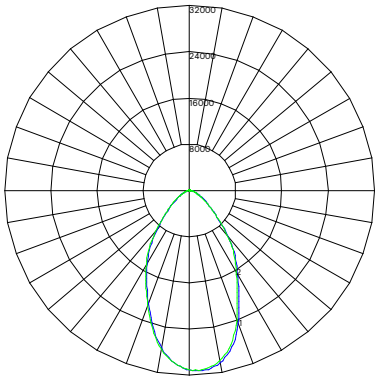

Candela Distribution						Flux
	0	22.5	45	67.5	90	Lumens
0	31083	31083	31083	31083	31083	
5	30837	31037	31156	31203	31058	2867
15	27022	27574	28046	28119	27655	7284
25	19466	19857	20251	20181	19568	8644
35	13364	13502	13699	13735	13383	7929
45	6994	6982	7133	7164	7110	5230
55	3394	3458	3331	3434	3403	2928
65	1603	1641	1594	1621	1602	1516
75	668	696	704	693	682	675
85	122	118	116	137	135	144
90	31	30	20	22	18	

Zonal Lumen Summary		
Zone	Lumens	%Fixture
0-20	10150.53	27.1
0-30	18794.92	50.3
0-40	26723.63	71.5
0-60	34882.37	93.3
0-80	37073.16	99.1
0-90	37216.68	99.5
90-180	174.48	0.5
0-180	37391.15	100

Avg. Luminance (cd/m²)			
	0	45	90
45	158305	161433	160915
55	94694	92945	94964
65	60687	60353	60657
75	41307	43557	42143
85	22404	21321	24782

Coefficients of Utilization % (Based on a floor reflectance of 0.2)

Pc---		80				70			50			0
Pw---		70	50	30	10	70	50	30	50	30	10	0
RCR	0	119	119	119	119	116	116	116	111	111	111	100
	1	112	108	105	102	109	106	103	102	100	98	90
	2	104	98	93	89	102	97	92	93	89	86	80
	3	98	90	83	79	95	88	82	85	81	77	72
	4	91	82	75	70	89	81	74	78	73	69	65
	5	86	75	68	63	84	74	68	72	67	62	59
	6	80	70	62	57	79	69	62	67	61	57	54
	7	76	65	57	52	74	64	57	62	56	52	50
	8	71	60	53	48	70	59	53	58	52	48	46
	9	67	56	49	45	66	56	49	54	48	44	42
	10	64	53	46	41	63	52	46	51	45	41	39

HCY 240W 3500K 90 DEG

Luminaire Lumens	36210
Luminaire Efficacy Rating (LER)	153
Total Luminaire Watts	236
Spacing Criterion (0–180)	1.3
Spacing Criterion (90–270)	1.3

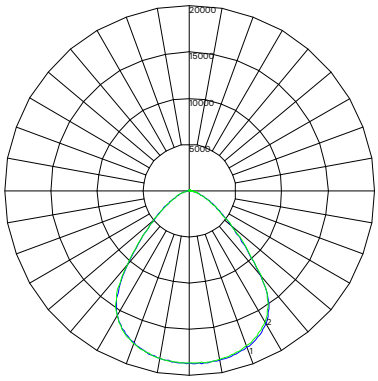

Candela Distribution						Flux
	0	22.5	45	67.5	90	Lumens
0	18702	18702	18702	18702	18702	
5	18685	18711	18700	18687	18684	1777
15	18367	18435	18430	18395	18330	5153
25	17392	17491	17523	17473	17337	7870
35	14857	14997	15068	15067	14826	8796
45	8458	8473	8611	8663	8657	6312
55	4039	4162	4002	4147	4097	3504
65	1829	1902	1849	1900	1865	1748
75	711	742	764	770	742	731
85	98	98	100	139	126	138
90	19	19	16	26	20	

Zonal Lumen Summary		
Zone	Lumens	%Fixture
0-20	6929.33	19.1
0-30	14799.39	40.9
0-40	23594.94	65.2
0-60	33410.7	92.3
0-80	35889.88	99.1
0-90	36028.04	99.5
90-180	181.79	0.5
0-180	36209.83	100

Avg. Luminance (cd/m²)			
	0	45	90
45	191426	194895	195936
55	112684	111667	114315
65	69258	70011	70636
75	43952	47224	45886
85	17970	18401	23175

Coefficients of Utilization % (Based on a floor reflectance of 0.2)

Pc---		80				70			50			0
Pw---		70	50	30	10	70	50	30	50	30	10	0
RCR	0	119	119	119	119	116	116	116	111	111	111	99
	1	111	108	104	101	109	105	102	101	99	96	89
	2	103	97	91	87	101	95	90	92	87	84	78
	3	96	87	81	75	94	86	80	83	78	73	69
	4	89	79	72	66	87	78	71	75	70	65	61
	5	83	72	64	59	81	71	64	69	63	58	55
	6	77	66	58	53	76	65	58	63	57	52	49
	7	72	60	53	47	71	60	52	58	52	47	44
	8	68	56	48	43	66	55	48	54	47	43	40
	9	63	51	44	39	62	51	44	50	43	39	37
	10	60	48	41	36	59	47	40	46	40	36	34

© 2026 Signify Holding. All rights reserved. The information provided herein is subject to change, without notice. Signify does not give any representation or warranty as to the accuracy or completeness of the information included herein and shall not be liable for any action in reliance thereon. The information presented in this document is not intended as any commercial offer and does not form part of any quotation or contract, unless otherwise agreed by Signify.

GENLYTE SOLUTIONS
a signify business

Signify North America Corp.
400 Crossing Blvd, Suite 600
Bridgewater, NJ 08807
Telephone: 800-555-0050

Signify Canada Ltd.
281 Hillmount Road,
Markham, ON, Canada L6C 2S3
Telephone: 800-668-9008

All trademarks are owned by Signify Holding or their respective owners.