10/14/18 kW

GENERAC AIR-COOLED STANDBY GENERATOR

Air-Cooled Residential Standby Generator

INCLUDES:

- Cellular connectivity standard, with Wi-Fi™ and Bluetooth™ capabilities
- Electronic fuel and ignition control (EFIC)
- Hydraulic lifters
- Smart Exercise Technology
- True Power™ Electrical Technology
- Power Zone™ 200 Controller
- Oil level sensor
- 200 Amp service rated transfer switch in bundled models
- Electronic governor
- System status & maintenance interval LED indicators
- Sound attenuated enclosure
- Natural gas or LP gas operation
- ecobee by Generac Smart Thermostat included in select bundles
- 5 Year limited warranty, generator and transfer switch
- Listed and labeled by the Southwest Research Institute allowing installation as close as 18 in (457 mm) to a structure.*

  **Must be located away from doors, windows, and fresh air intakes and in accordance with local codes.*

STANDBY POWER RATING

G007257-0, G007321-0 (Aluminum-Metro Gray) - 10kW 60 Hz
G007258-0; G007323-0 (Aluminum-Metro Gray) - 14kW 60 Hz
G007259-0; G007324-0 (Aluminum-Metro Gray) - 18kW 60 Hz

QUIET TEST™

NOTE: Generator is certified for use in the US and Canada. See Transfer Switch section for the transfer switch certification details.

FEATURES

- **INNOVATIVE ENGINE DESIGN & RIGOROUS TESTING** are at the heart of Generac's success in providing the most reliable generators possible. Generac's G-Force engine lineup offers added peace of mind and reliability for when it's needed the most. The G-Force series engines are purpose built and designed to handle the rigors of extended run times in high temperatures and extreme operating conditions.
- **TRUE POWER™ ELECTRICAL TECHNOLOGY:** Superior harmonics and sine wave form produce less than 5% Total Harmonic Distortion for utility quality power. This allows confident operation of sensitive electronic equipment and micro-chip based appliances, such as variable speed HVAC systems.
- **TEST CRITERIA:**
  - ✓ PROTOTYPE TESTED
  - ✓ SYSTEM TORSIONAL TESTED
  - ✓ NEMA MG1-22 EVALUATION
  - ✓ MOTOR STARTING ABILITY
- **MOBILE LINK® CONNECTIVITY:** Standard with the Generac Air-Cooled Standby Generator home standby generators, Mobile Link Cellular allows users to monitor the status of their generator from anywhere using a smartphone, tablet, or PC. Easily access real-time operating status, maintenance alerts, and generator readiness. Users can also connect their account to an authorized service dealer for proactive support and streamlined service. With Mobile Link, users can see their generator is ready before the next power outage.
- **SOLID-STATE VOLTAGE REGULATION:** This state-of-the-art power maximizing regulation system is standard on all Generac models. It provides optimized FAST RESPONSE to changing load conditions and MAXIMUM MOTOR STARTING CAPABILITY by electronically torque-matching the surge loads to the engine. Digital voltage regulation at ±1%.
- **SINGLE SOURCE SERVICE RESPONSE** from Generac's extensive dealer network provides parts and service know-how for the entire unit, from the engine to the smallest electronic component.
- **GENERAC TRANSFER SWITCHES:** Long life and reliability are synonymous with GENERAC POWER SYSTEMS. One reason for this confidence is that the GENERAC product line is offered with its own transfer systems and controls for total system compatibility.

THE GENERAC PROMISE

USA ENGINEERED & BUILT* · 24/7·365 CUSTOMER CARE · FIVE YEAR LIMITED WARRANTY 5

GENERAC Mobile Link™

** Assembled in the USA using domestic and foreign parts.*

GENERAC

Features and Benefits

Engine

Electronic fuel and ignition control - EFIC	Improves generator performance by automatically adjusting for the changing environment. Improves fuel efficiency and reduces emissions on average.
Hydraulic lifters	Automatically maintains optimal valve spacing. No more manually adjusting valves required.
Generac G-Force design	Maximizes engine “breathing” for increased fuel efficiency. Plateau honed cylinder walls and plasma moly rings help the engine run cooler, reducing oil consumption and supporting longer engine life.
Cast iron cylinder walls	Rigid construction and added durability help prolong engine life.
Full pressure lubrication system	Pressurized lubrication to all vital bearings facilitates better performance, less maintenance, and longer engine life. Featuring up to a 2 year/200 hour oil change interval.
Low oil pressure shutdown system	Shutdown protection helps to prevent catastrophic engine damage due to low oil.
Oil level sensor	Continuously monitors and reports engine oil levels.
High temperature shutdown	Helps prevent damage due to overheating.
Electronic governor	Maintains constant 60 Hz frequency.

Generator

Revolving field	Allows for a smaller, light weight unit which operates 25% more efficiently than a revolving armature generator.
Skewed stator	Produces a smooth output waveform for compatibility with electronic equipment.
Displaced phase excitation	Maximizes motor starting capability.
Automatic voltage regulation	Regulating output voltage to ±1% prevents damaging voltage spikes.
Listed to UL 2200	For your safety.

Power Zone Controls

AUTO/MANUAL/OFF/SERVICE buttons with LED indicators	Select the operating mode and provides easy, at-a-glance status indication in any condition.
Sealed, raised buttons	Smooth, weather-resistant user interface for programming and operations.
External LED indicators	Adjustable brightness LED indicators to communicate system status and maintenance intervals.
Smart Exercise	Allows the system to skip its scheduled exercise if the generator ran for more than 5 consecutive minutes within the 72 hours prior to a scheduled exercise event, allowing for fuel cost savings to the owner.
Utility voltage sensing	Monitors utility voltage, with adjustable dropout (75-80%) and pickup (84-89%) of nominal voltage.
Generator voltage sensing	Monitors generator voltage to verify the cleanest power delivered to the home.
Utility interrupt delay	Prevents nuisance start-ups of the engine, adjustable 2–1,500 seconds from the factory default setting of 10 seconds by a qualified dealer.
Engine warm-up	Verifies engine is ready to assume the load. Adjustable 0–60 seconds by a qualified dealer (factory default setting 5 seconds).
Engine cool-down	Allows engine to cool prior to shutdown. Adjustable 60–1,500 seconds by a qualified dealer (factory default setting 60 seconds).
Programmable exercise	Operates engine to prevent oil seal drying and damage between power outages by running the generator for 5 minutes every week. Also offers a selectable setting for weekly, bi-weekly, or monthly operation with an adjustable run time from 5 to 20 minutes, and an option for a low speed engine rpm, providing flexibility and potentially lower fuel costs to the owner.
Smart battery charger	Delivers charge to the battery only when needed at varying rates depending on outdoor air temperature. Compatible with AGM-style batteries.
Generator emergency shutdown	A recessed button on the outside of the enclosure for emergency personnel to use to perform an emergency shutdown of the generator.

Features and Benefits

Unit

SAE weather protective enclosure	Sound attenuated enclosure provides quiet operation and weather protection, withstanding winds up to 150 mph (241 km/h). Hinged key locking roof panel for security. Lift-out front for easy access to all routine maintenance items. Electrostatically applied textured epoxy paint for added durability.
Enclosed muffler	Quiet muffler is mounted inside the unit.
Small, compact, attractive	Makes for an easy, aesthetically pleasing installation, as close as 18 in (457 mm) away from a structure. Must be located away from doors, windows, and fresh air intakes and in accordance with local codes.
Main line circuit breaker	Protects generator from overload.

Installation System

14 in (35.6 cm) flexible fuel line connector	Listed ANSI Z21.75/CSA 6.27 outdoor appliance connector for the required connection to the gas supply piping.
Integral sediment trap	Meets IFGC and NFPA 54 installation requirements.

Connectivity

Generator status	Monitor the generator with a smartphone, tablet, or computer at any time via the Mobile Link application for complete peace of mind. Generator status can also be displayed on certain ecobee Smart Thermostat models.
Exercise/Run and Total Hours	Review the generator's complete protection profile for exercise hours and total hours.
Maintenance information	Provides maintenance information for the specific model generator when scheduled maintenance is due.
Monthly report with previous month's activity	Detailed monthly reports provide historical generator information.
Battery information	Built in battery diagnostics displaying current state of the battery.
Weather information	Provides detailed local ambient weather conditions for generator location.
Configurable exercise and duration	Select Low Speed Exercise, Smart Exercise, or Transfer on Exercise options. Adjust generator to exercise for 5–20 minutes (5 minute default).
Installation and service application	Generator installers and service technicians must use the Field Pro mobile application when installing or servicing the generator.

GENERAC®

Specifications

Generator

Model	10 kW	14 kW	18 kW
Rated maximum continuous power capacity (LP)	10 kW*	14 kW*	18 kW*
Rated maximum continuous power capacity (NG)	9 kW*	14 kW*	17 kW*
Rated voltage	240		
Rated maximum continuous load current – 240 Volts (LP / NG)	42 / 38	58 / 58	75 / 71
Total Harmonic Distortion	Less than 5%		
Main line circuit breaker	45 amp	60 amp	80 amp
Phase	1		
Number of rotor poles	2		
Rated AC frequency	60 Hz		
Power factor	1.0		
Battery requirement (not included)	12 volts, AGM Powersport Battery Group BTX20L 310CCA minimum		
Unit weight (lb / kg)	334 / 156	391 / 177	426 / 193
Dimensions (L x W x H) in / cm	46.4 x 26.3 x 30.7 / 117.9 x 66.8 x 77.9		
Sound output in dB(A) at 23 ft (7 m) with generator operating at normal load**	61	65	65
Sound output in dB(A) at 23 ft (7 m) with generator in Quiet-Test™ low-speed exercise mode **	49	55	55
Exercise duration	Adjustable 5 - 20 min (5 min factory default)		

Engine

Engine type	GENERAC G-Force 400 Series	GENERAC G-Force 800 Series	
Number of cylinders	1	2	
Displacement	459 cc	817 cc	
Cylinder block	Aluminum w/ cast iron sleeve		
Valve arrangement	Overhead valve		
Lifter type	Hydraulic		
Ignition system	Solid-state		
Governor system	Electronic		
Compression ratio	9.5:1		
Starter	12 VDC		
Oil capacity including filter	Approx. 1.4 qt (1.3 L)	Approx. 2.5 qt / 2.4 L	
Operating rpm	3,600		
Fuel consumption			
Natural Gas	ft^3/hr (m^3/hr)		
1/2 Load	98 (2.77)	189 (5.35)	164 (4.65)
Full Load	132 (3.74)	243 (6.89)	235 (6.64)
Liquid Propane			
	ft^3/hr (gal/hr) [L/hr]		
1/2 Load	35 (0.94) [3.55]	63 (1.76) [6.66]	60 (1.65) [6.26]
Full Load	58 (1.60) [6.07]	106 (2.92) [11.03]	105 (2.87) [10.87]

Fuel pipe must be sized for full load. Required fuel pressure to generator fuel inlet at all load ranges - 3.5–7 in water column (0.87–1.74 kPa) for NG, 10–12 in water column (2.49–2.99 kPa) for LP gas. For BTU content, multiply ft^3/hr x 2,500 (LP) or ft^3/hr x 1,000 (NG). For Megajoule content, multiply m^3/hr x 93.15 (LP) or m^3/hr x 37.26 (NG).

**Sound levels are taken from the front of the generator. Sound levels taken from other sides of the generator may be higher depending on installation parameters. Rating definitions - Standby: Applicable for supplying emergency power for the duration of the utility power outage. No overload capability is available for this rating. (All ratings in accordance with BS5514, ISO3046 and DIN6271). * Maximum kilovolt amps and current are subject to and limited by such factors as fuel BTU/megajoule content, ambient temperature, humidity, barometric pressure, altitude, engine power and condition, etc. Maximum power decreases approximately 3.5% for each 1,000 ft (304.8 m) above sea level; and also will decrease approximately 1% for each 10 °F (6 °C) above 60 °F (16 °C).

Controls

Mode buttons: AUTO	Automatic start on utility failure. Programmable exerciser.
MANUAL	Start with starter control, unit stays on. If utility fails, transfer to load takes place.
OFF	Stops unit. Generator will not automatically start on utility failure. Control and charger still operate if utility is available.
SERVICE	For diagnostic personnel use to prevent remote commands for safe interaction, and prevent nuisance Mobile Link notifications during diagnostic testing.
Ready to Run/Maintenance messages	Standard
Engine Run Hours indication	Standard
Programmable start delay between 2–1,500 seconds	Standard (programmable by dealer only).
Utility nominal voltage setting	Adjustable to greater than or less than 10% of 240V, (90-110%, default 100%).
Utility Voltage Loss/Return to Utility adjustable (brownout setting)	Adjustable against nominal voltage setting, 75-80% dropout / 84-89% pickup.
Future Set Capable Exerciser/Exercise Set Error warning	Standard
Run/Alarm/Maintenance logs	50 events each.
Engine start sequence	Cyclic cranking: Engine cranks a maximum of five times at factory set intervals and durations.
Starter lock-out	Starter cannot re-engage until 5 sec after engine has stopped.
Smart battery charger	Standard
Charger Fault/Missing AC warning	Standard
Low Battery/Battery Problem Protection and Battery Condition indication	Standard
Automatic Voltage Regulation with Over and Under Voltage protection	Standard
Under-Frequency/Overload/Stepper Overcurrent protection	Standard
Safety Fused/Fuse Problem protection	Standard
Automatic Low Oil Pressure/High Oil Temperature shutdown	Standard
Overcrank/Overspeed (@ 72 Hz)/RPM Sense Loss shutdown	Standard
High Engine Temperature shutdown	Standard
Internal Fault/Incorrect Wiring protection	Standard
Common external fault capability	Standard
Automatically upgradable firmware via Cellular or Wi-Fi	Standard

Transfer Switch Specifications

Service Entrance Rated Switch Features

- Includes fuse control module (FCM) standard.
- Integrated surge protection.
- Energy Management sold separately.
- Electrically operated, mechanically-held contacts for fast, clean connections.
- Rated for all classes of load, 80% continuous load, both inductive and resistive.
- 2–pole, 250 VAC contactors.
- Service equipment rated, dual coil design.
- Rated for both aluminum and copper conductors.
- Main contacts are silver plated or silver alloy to resist welding and sticking.
- NEMA 3R aluminum outdoor enclosure allows for indoor or outdoor mounting flexibility.
- Includes installation fast mount.

Model	G007323-0 (14kW) G007324-0 (18kW)
Part number	A0007362849
No. of poles	2
Current rating (amps)	200
Voltage rating (VAC)	120/240, 1Ø
Enclosure type	Standard NEMA 3R
Circuit breaker protected	22,000
Lug range	250 MCM - #6
Surge protection	Integrated surge protection
Weight	39.0 lbs (17.7 kg)
ETL certification	ETLus

NOTE: The 200 amp service entrance rated transfer switches are certified for use in US only.

Dimensions

	Height		Width		Depth
	H1	H2	W1	W2	
in	26.8	30.1	10.5	13.5	6.3
cm	68.1	76.45	26.67	34.3	16.01

Wire Ranges		
Conductor Lug	Neutral Lug	Ground Lug
250 MCM - #6	350 MCM - #6	2/0 - #14

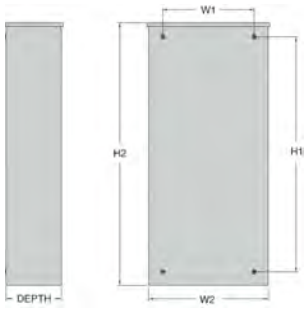

Limited Circuit Switch Features

- 16 space, 24 circuit. Breakers not included.
- Electrically operated, mechanically-held contacts for fast, positive connections.
- Rated for all classes of load, 100% equipment rated, both inductive and resistive.
- 2–pole, 250 VAC contactors.
- 30 millisecond transfer time.
- Dual coil design.
- Rated for both aluminum and copper conductors.
- Main contacts are silver plated or silver alloy to resist welding and sticking.
- NEMA 3R aluminum outdoor enclosure allows for indoor or outdoor mounting flexibility.
- Multi-listed for use with 1 in standard, tandem, GFCI, and AFCI breakers from Siemens, Murray, Eaton, and Square D for the most flexible and cost effective install.

Model	G007321-0 (10 kW)
Part number	10000012054
No. of poles	2
Current rating (amps)	100
Voltage rating (VAC)	120/240, 1Ø
Enclosure type	NEMA 3R
Circuit breaker protected	10,000
Lug wire range	1/0 - #14
Weight	39.0 lbs (17.7 kg)
ETL certification	cETLus

NOTE: The 100 amp service rated transfer switches are certified for use in US and Canada.

Dimensions

	Height		Width		Depth
	H1	H2	W1	W2	
in	26.8	30.1	10.5	13.5	6.9
cm	68.1	76.45	26.67	34.3	17.5

Wire Ranges		
Conductor Lug	Neutral Lug	Ground Lug
1/0 - #14	1/0 - #14	1/0 - #14

Available Accessories

Model #	Product	Description
A0006487350	AGM Group BTX20L Battery	Every standby generator requires a battery to start the system. Generac offers the recommended battery for use with Air-Cooled Standby Generators.
G007211-0	Battery Heater	The battery heater wraps around the battery. Recommended for use if temperature regularly falls below 32 °F (0 °C).
G007102-1	Oil Heater	Oil heater slips directly over the oil filter. Recommended for use if temperature regularly falls below 32 °F (0 °C).
G007103-2	Breather Heater	Breather heater is for use in extreme cold weather applications where heavy icing occurs. Recommended for use if the temperature regularly falls below 0 °F (-18 °C).
G005621-0	Auxiliary Transfer Switch Contact Kit	The auxiliary transfer switch contact kit allows the transfer switch to lock out a single large electrical load that may not be needed. Not compatible with 50 amp pre-wired switches.
G009918-0 - Metro Gray	Touch-Up Paint Kit	If the generator enclosure is scratched or damaged, it is important to touch-up the paint to protect from future corrosion. The touch-up paint kit includes the necessary paint to correctly maintain or touch-up a generator enclosure.
G006482-0 - 10 kW G007216-0 - 14-18 kW	Scheduled Maintenance Kit	Generac's scheduled maintenance kit provides all the items necessary to perform complete routine maintenance on an air-cooled standby generator (oil not included).
G007009-0	LTE LP Tank Fuel Level Monitor	The LTE enabled LP tank fuel level monitor provides constant monitoring of the connected LP fuel tank. Monitoring the LP tank's fuel level is an important step in verifying the generator is ready to run during an unexpected power failure. Status alerts are available through a free application to notify users when the LP tank is in need of a refill.
G007000-1 (50 amp) G007006-1 (100 amp)	Generac Load Manager	Generac Load Managers (LMs) are used to optimize the performance of a standby generator. They manage large electrical loads upon startup, and shed them to aid in recovery when overloaded. In many cases, using LMs can reduce the overall size and cost of the system.
G007025-0	Generac HVAC Energy Manager	The Generac HVAC Energy Manager is designed to independently manage up to two residential HVAC systems for Generac Home Standby Generators. Incorporating the Generac HVAC Energy Manager achieves NEC home backup system sizing compliance while also lowering the total cost of acquisition for homeowners by enabling a smaller system to meet the residence's power needs.
G007364-0	ecobee by Generac smart Thermostat	The ecobee by Generac Smart Thermostat Enhanced comes with built-in HVAC load management, removing the need to install extra equipment. This home energy manager offers a seamless integration into the Generac ecosystem, managing the home's HVAC system(s) and protecting the home backup energy system from potential overloads with precision. Can also be used to remotely view the status of the generator.

Dimensions & UPCs

Model	UPC
G007257-0	696471104059
G007321-0	696471104295
G007258-0	696471103700
G007323-0	696471104714
G007259-0	696471103717
G007324-0	696471104721

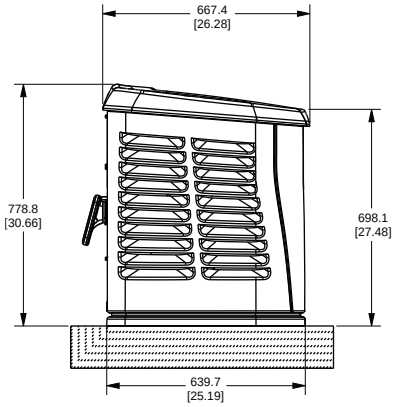

LEFT SIDE VIEW

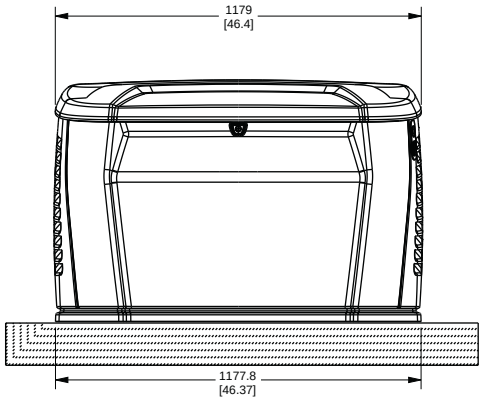

FRONT VIEW

Dimensions shown are approximate. See installation manual for exact dimensions. DO NOT USE THESE DIMENSIONS FOR INSTALLATION PURPOSES.

©2026 Generac Power Systems, Inc. All rights reserved. All specifications are subject to change without notice.
Part No. A0005151081
Rev. C 02/11/2026