Data Sheet | Item Number: 753-559

4-channel analog output; 0 ... 10 VDC

https://www.wago.com/753-559

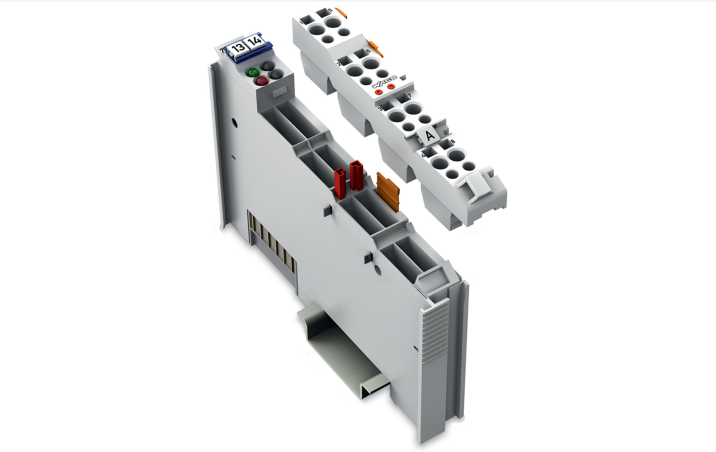

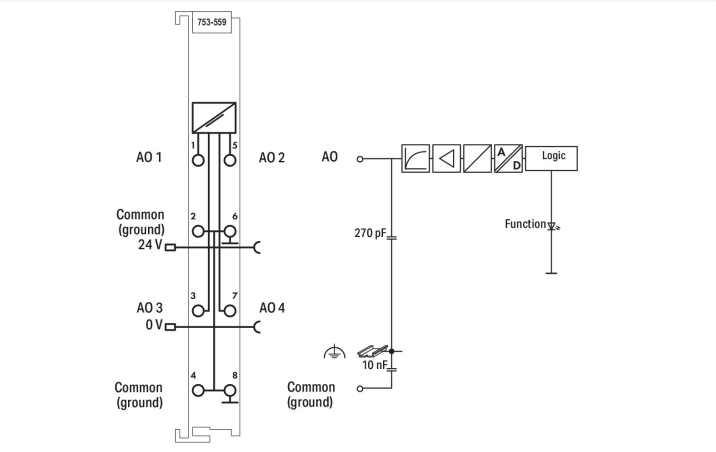

Color: light gray

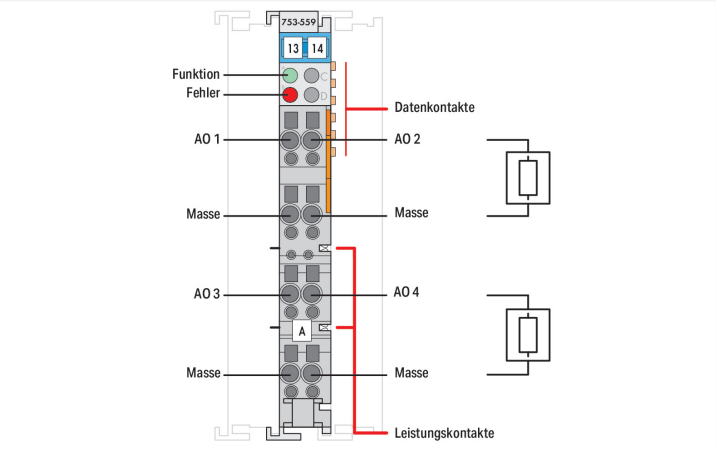

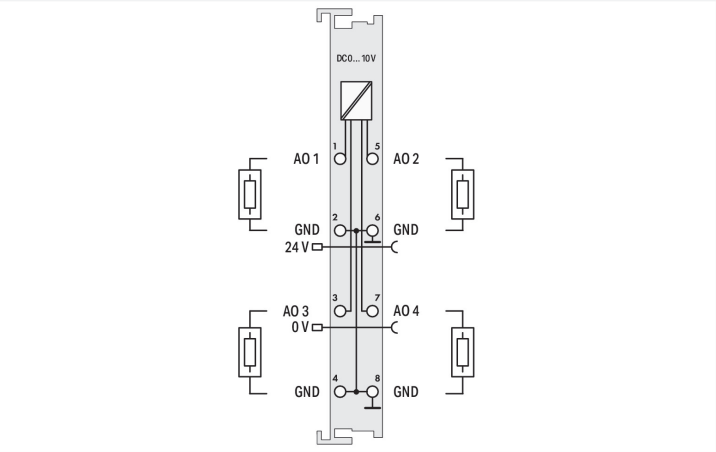

This analog output module generates standard 0–10 V signals.
The output signal is electrically isolated and transmitted with a resolution of 12 bits.
The internal system supply powers the module.
The module's output channels have a common ground potential.

Notes

Note	Pluggable connectors and coding fingers (753 Series) are not included.

Technical data

Number of analog outputs	4
Total number of channels (module)	4
Signal type	Voltage
Signal type (voltage)	0 ... 10 VDC
Actuator connection	4 x (2-wire)
Resolution [bit]	12 bits
Data width	4 x 16-bit data; 4 x 8-bit control/status (optional)
Load impedance (voltage output)	≥ 5 kΩ
Conversion time (typ.)	10 ms
Output error, reference temperature	25 °C

 Continued on next page

Technical data

Output error, deviation (max.) of the upper-range value	0.1 %
Temperature error (max.) of the output range value	0.01 %/K
Recovery time (typ.)	100 ms
Supply voltage (system)	5 VDC; via data contacts
Current consumption (5 V system supply)	125 mA
Supply voltage (field)	24 VDC (-25 … +30 %); via power jumper contacts (power supply via blade contact; transmission (field side supply voltage only) via spring contact)
Isolation	500 V system/field
Indicators	LED (A) green: function; LED (B) red: Error
Number of incoming power jumper contacts	2
Number of outgoing power jumper contacts	2

Connection Data

Connection technology: I/O	8 x CAGE CLAMP®
Connectable conductor materials	Copper
Connection type	Inputs/outputs
Solid conductor	0.08 … 2.5 mm² / 28 … 14 AWG
Fine-stranded conductor	0.08 … 2.5 mm² / 28 … 14 AWG
Strip length	9 … 10 mm / 0.35 … 0.39 inches

Physical data

Width	12 mm / 0.472 inches
Height	100 mm / 3.937 inches
Depth	69.8 mm / 2.748 inches
Depth from upper-edge of DIN-rail	62.6 mm / 2.465 inches

Mechanical data

Mounting type	DIN-35 rail
Pluggable connector	pluggable

Material data

Color	light gray
Housing material	Polycarbonate; polyamide 6.6
Fire load	0.765 MJ
Weight	42 g
Conformity marking	CE

Environmental requirements

Ambient temperature (operation)	0 … +55 °C
Ambient temperature (storage)	-40 … +85 °C
Protection type	IP20
Pollution degree	2 per IEC 61131-2
Operating altitude	0 … 2000 m / 0 … 6562 ft
Mounting position	Horizontal left, horizontal right, horizontal top, horizontal bottom, vertical top and vertical bottom
Relative humidity (without condensation)	95 %
Vibration resistance	4g per IEC 60068-2-6
Shock resistance	15g per IEC 60068-2-27
EMC immunity to interference	per EN 61000-6-2, marine applications
EMC emission of interference	per EN 61000-6-4, marine applications
Exposure to pollutants	per IEC 60068-2-42 and IEC 60068-2-43
Permissible H_2S contaminant concentration at a relative humidity 75 %	10 ppm

 Continued on next page

Environmental requirements

Permissible SO_2 contaminant concentration at a relative humidity 75 %	25 ppm

Commercial data

Product Group	15 (I/O System)
PU (SPU)	1 pcs
Packaging type	Box
Country of origin	DE
GTIN	4045454490546
Customs tariff number	85389099990

Product Classification

UNSPSC	32101505
eCl@ss 10.0	27-24-26-01
eCl@ss 9.0	27-24-26-01
ETIM 9.0	EC001596
ETIM 10.0	EC001596
ECCN	NO US CLASSIFICATION

Environmental Product Compliance

CAS-No.	1303-86-2 1317-36-8 25550-51-0 7439-92-1
REACH Candidate List Substance	4-Methyl-1,2-cyclohexanedicarboxylic anhydride Diboron trioxide Lead Lead monoxide
RoHS Compliance Status	Compliant,With Exemption
RoHS Exemption	6(c) 7(a) 7(c)-I 7(c)-II
SCIP notification number (Austria)	aaa43e29-b1e8-421e-a582-5a9cf19a73bf
SCIP notification number (Belgium)	15882671-0da6-4efd-92c8-29e588d659b4
SCIP notification number (Bulgaria)	b62c73c8-775d-4a78-a2e7-bcf5528c8278
SCIP notification number (Czech Republic)	fbcc4e7e-5382-45e4-8512-c364b8639665
SCIP notification number (Denmark)	04f5b16a-3f0c-4714-aeef-710d0d5fc07e
SCIP notification number (Finland)	d64dad75-8df4-4e3e-8468-498e1a96d80f
SCIP notification number (France)	5f37322a-cc32-4e50-a99b-17e0397021fe
SCIP notification number (Germany)	c96d5a15-37d7-400b-9d0b-195767c4f818
SCIP notification number (Hungary)	377dad6a-00f5-429d-9274-e5a62013fb33
SCIP notification number (Italy)	cb3e445f-71c9-48ee-b555-238581e2bc10
SCIP notification number (Netherlands)	9abae02a-e5f2-4770-a536-775cf242fb1c
SCIP notification number (Poland)	8d8ca3bf-ccb5-4ae5-a3c6-2d4d88e218d9
SCIP notification number (Romania)	3c176401-79f4-4b38-b7d6-f5b04cfda355
SCIP notification number (Sweden)	3f0121c3-4697-4568-b059-bf4ce04181fc

 Continued on next page

Approvals / Certificates

General approvals

Approval	Standard	Certificate Name
EAC GZO Almaty Standart	TP TC 020/2011	EAC CoC 03083
KC National Radio Research Agency	Article 58-2, Clause 3	MSIP-REM-W43-AOM750
UL Underwriters Laboratories Inc. (ORDINARY LOCATIONS)	UL 508	E175199

Declarations of conformity and manufacturer's declarations

Approval	Standard	Certificate Name
EU-Declaration of Conformity WAGO GmbH & Co. KG	-	-

Approvals for marine applications

Approval	Standard	Certificate Name
ABS American Bureau of Shipping	-	22-2219060
BSH Bundesamt fuer Seeschifffahrt und Hydrographie	-	1104
BV Bureau Veritas S.A.	-	13453/E0 BV
DNV DNV GL SE	DNV-CG-0339,Aug.2021	TAA0000194
KR Korean Register of Shipping	-	KR HMB05880-AC001
LR Lloyds Register EMEA	-	LR22180952TA
PRS Polski Rejestr Statków	-	TE/1101/880590/23
RINA RINA Germany GmbH	-	ELE343521XG001

Approvals for hazardous areas

Approval	Standard	Certificate Name
ATEX TUEV Nord Cert GmbH	EN 60079-0	TUEV14ATEX148929X (II 3 G Ex ec IIC T4 Gc)
CCCEx CQST/CNEx	CNCA-C23-01	2020312310000213 (Ex ec IIC T4 Gc)
INMETRO TÜV Rheinland do Brasil Ltda.	IEC 60079-0	TÜV 12.1297 X
UKEx WAGO GmbH & Co. KG	EN 60079-0	UKCA_WAGO22UKEX003X_ec
UL Underwriters Laboratories Inc. (HAZARDOUS LOCATIONS)	UL 121201	E198726

Downloads

Environmental Product Compliance

Compliance Search

Environmental Product Compliance 753-559

Continued on next page

Documentation

Manual

Product Manual 4-channel, 0 - 10VDC	V 1.2.0	pdf 2382.10 KB	
System Manual Series 750/753			

System Description

750/753 Series I/O-System – General Product Information	pdf 953.35 KB	
Overview on WAGO-I/O-SYSTEM 750 approvals	pdf 770.48 KB	

Bid Text

753-559	19.02.2019	xml 4.67 KB	
753-559	05.03.2019	docx 17.43 KB	

Instruction Leaflet

CCC Ex (Additional information)	26.04.2023	pdf 159.76 KB	

CAD/CAE-Data

CAD data

2D/3D Models 753-559

CAE data

EPLAN Data Portal 753-559

WSCAD Universe 753-559

ZUKEN Portal 753-559

1 Compatible Products

1.1 Required Accessories

1.1.1 Pluggable connector

1.1.1.1 Male connector/plug

Item No.: 753-110
Plug

1.2 Optional Accessories

1.2.1 DIN-rail

1.2.1.1 Mounting accessories

Item No.: 210-196
Aluminum carrier rail; 35 x 8.2 mm; 1.6 mm thick; 2 m long; unslotted; similar to EN 60715; silver-colored

Item No.: 210-198
Copper carrier rail; 35 x 15 mm; 2.3 mm thick; 2 m long; unslotted; according to EN 60715; copper-colored

Item No.: 210-197
Steel carrier rail; 35 x 15 mm; 1.5 mm thick; 2 m long; slotted; similar to EN 60715; silver-colored

Item No.: 210-114
Steel carrier rail; 35 x 15 mm; 1.5 mm thick; 2 m long; unslotted; similar to EN 60715; silver-colored

Item No.: 210-118
Steel carrier rail; 35 x 15 mm; 2.3 mm thick; 2 m long; unslotted; according to EN 60715; silver-colored

Item No.: 210-112
Steel carrier rail; 35 x 7.5 mm; 1 mm thick; 2 m long; slotted; according to EN 60715; "Hole width 25 mm; silver-colored

Item No.: 210-113
Steel carrier rail; 35 x 7.5 mm; 1 mm thick; 2 m long; unslotted; according to EN 60715; silver-colored

 Continued on next page

1.2.2 Marking

1.2.2.1 Group marker carrier

Item No.: 750-106
Group marker carrier

1.2.2.2 Marker

Item No.: 750-100
Marker card; as a DIN A4 sheet; plain

Item No.: 2009-145/000-006
Mini-WSB Inline; for Smart Printer; 1700 pieces on roll; stretchable 5 - 5.2 mm; plain; snap-on type; blue

Item No.: 2009-145/000-007
Mini-WSB Inline; for Smart Printer; 1700 pieces on roll; stretchable 5 - 5.2 mm; plain; snap-on type; gray

Item No.: 2009-145/000-023
Mini-WSB Inline; for Smart Printer; 1700 pieces on roll; stretchable 5 - 5.2 mm; plain; snap-on type; green

Item No.: 2009-145/000-012
Mini-WSB Inline; for Smart Printer; 1700 pieces on roll; stretchable 5 - 5.2 mm; plain; snap-on type; orange

Item No.: 2009-145/000-005
Mini-WSB Inline; for Smart Printer; 1700 pieces on roll; stretchable 5 - 5.2 mm; plain; snap-on type; red

Item No.: 2009-145/000-024
Mini-WSB Inline; for Smart Printer; 1700 pieces on roll; stretchable 5 - 5.2 mm; plain; snap-on type; violet

Item No.: 2009-145
Mini-WSB Inline; for Smart Printer; 1700 pieces on roll; stretchable 5 - 5.2 mm; plain; snap-on type; white

Item No.: 2009-145/000-002
Mini-WSB Inline; for Smart Printer; 1700 pieces on roll; stretchable 5 - 5.2 mm; plain; snap-on type; yellow

Item No.: 248-501/000-006
Mini-WSB marking card; as card; not stretchable; plain; snap-on type; blue

Item No.: 248-501/000-007
Mini-WSB marking card; as card; not stretchable; plain; snap-on type; gray

Item No.: 248-501/000-023
Mini-WSB marking card; as card; not stretchable; plain; snap-on type; green

Item No.: 248-501/000-017
Mini-WSB marking card; as card; not stretchable; plain; snap-on type; light green

Item No.: 248-501/000-012
Mini-WSB marking card; as card; not stretchable; plain; snap-on type; orange

Item No.: 248-501/000-005
Mini-WSB marking card; as card; not stretchable; plain; snap-on type; red

Item No.: 248-501/000-024
Mini-WSB marking card; as card; not stretchable; plain; snap-on type; violet

Item No.: 248-501
Mini-WSB marking card; as card; not stretchable; plain; snap-on type; white

Item No.: 248-501/000-002
Mini-WSB marking card; as card; not stretchable; plain; snap-on type; yellow

1.2.2.3 Marker carrier

Item No.: 750-103
Group marker carrier

1.2.3 Pluggable connector

1.2.3.1 Coding

Item No.: 753-150
753 Series coding elements

 Continued on next page

1.2.4 Shield termination

1.2.4.1 Shield clamping saddles

Item No.: 790-108
Shield clamping saddle; 11 mm wide; diameter of compatible conductor; 3 … 8 mm

Item No.: 790-208
Shield clamping saddle; 12.4 mm wide; 3 … 8 mm

Item No.: 790-116
Shield clamping saddle; 19 mm wide; diameter of compatible conductor; 7 … 16 mm

Item No.: 790-216
Shield clamping saddle; 21.8 mm wide; 6 … 16 mm

Item No.: 790-124
Shield clamping saddle; 27 mm wide; diameter of compatible conductor; 6 … 24 mm

Item No.: 790-220
Shield clamping saddle; 30 mm wide; 6 … 20 mm

Item No.: 790-140
Shield clamping saddle; diameter of compatible conductor

1.2.5 System enclosure

1.2.5.1 System enclosure

Item No.: 850-825
IP65 enclosure; Aluminium (RAL 7032); WxHxD (160x100x160 mm); 9 x M12, 4 x M20

Item No.: 850-826
IP65 enclosure; Aluminium (RAL 7032); WxHxD (240x100x160 mm); 4 x M20, 4 x M16, 14 x M12 cable grip

Item No.: 850-827
IP65 enclosure; Aluminium (RAL 7032); WxHxD (320x100x160 mm); 4 x M20, 8 x M16, 17 x M12 cable grip

Item No.: 850-828
IP65 enclosure; Aluminium (RAL 7032); WxHxD (480x100x160 mm); 4 x M20, 10 x M16, 35 x M12 cable grip

Item No.: 850-826/002-000
IP65 enclosure; Aluminium (RAL 7035); WxHxD (240x100x160 mm); 4 x M20, 4 x M16, 14 x M12 cable grip

Item No.: 850-827/002-000
IP65 enclosure; Aluminium (RAL 7035); WxHxD (320x100x160 mm); 4 x M20, 8 x M16, 17 x M12 cable grip

Item No.: 850-828/002-000
IP65 enclosure; Aluminium (RAL 7035); WxHxD (480x100x160 mm); 4 x M20, 10 x M16, 35 x M12 cable grip

Item No.: 850-834
IP65 enclosure; Polyester (RAL 7032); WxHxD (164x100x164 mm); 9 x M12, 4 x M20

Item No.: 850-835
IP65 enclosure; Polyester (RAL 7032); WxHxD (244x100x164 mm); 4 x M20, 4 x M16, 14 x M12 cable grip

Item No.: 850-836
IP65 enclosure; Polyester (RAL 7032); WxHxD (324x100x164 mm); 4 x M20, 8 x M16, 17 x M12 cable grip

Item No.: 850-814/002-000
IP65 enclosure; Sheet steel (RAL 7035); WxHxD (200x120x200 mm); without flange plate

Item No.: 850-815/002-000
IP65 enclosure; Sheet steel (RAL 7035); WxHxD (300x120x200 mm); without flange plate

Item No.: 850-816/002-000
IP65 enclosure; Sheet steel (RAL 7035); WxHxD (400x120x200 mm); without flange plate

Item No.: 850-817/002-000
IP65 enclosure; Sheet steel (RAL 7035); WxHxD (600x120x200 mm); without flange plate