LITHONIA LIGHTING®

Catalog Number	
Notes	
Type	

QUANTUM®

EDGRM Running Man LED Edge-Lit



FEATURES & SPECIFICATIONS

INTENDED USE — Ideal for applications requiring attractive, quick-installation running man edge-lit signs and low energy consumption.

CONSTRUCTION — Lightweight and adjustable extruded aluminum housing with a clear acrylic panel. Extruded aluminum, black and white finishes. Field selectable direction, comes fully packaged with right arrow, left arrow, and pictogram only face plates.

OPTICS — Ultra bright LEDs mounted on printed circuit boards. Low energy consumption. LED lamp operates in normal (AC input) and emergency (DC input) modes. Uniform illumination without shadows or hot spots.

The typical life of the running man LED lamp is >5 years, based on 24/7 operation.

ELECTRICAL — Universal voltage input capability (120-347V), 50/60 Hz.

Battery: Sealed, maintenance-free nickel metal hydride battery delivers a minimum of 90 minutes of illumination.

Automatic solid-state charger initiates battery charging, maximizes battery life and automatically recharges after battery discharge.

INSTALLATION — Universal surface (top, end or back) mounting. Canopy provided.

For Single or double face applications, ships standard with 2 right/left arrow (reversible) face plates, 2pictogram only face plates, and a solid faceplate.

ESRH: A recessed kit can be purchased as an accessory to convert it from a surface mount to a recessed mount in the field.

LISTINGS — Meets US and Canadian standards. UL listed for damp location 10°- 40°C (50°F to 104°F). Meets CSA C22.2 No. 141.15. Meets CSA C860. Meets UL924, NFPA 101 (current Life Safety Code), NFPA 70- NEC, FCC Title 47, Part 15, Subpart B and OSHA illumination standards.

WARRANTY — 5-year limited warranty (Battery is prorated.) This is the only warranty provided and no other statements in this specification sheet create any warranty of any kind. All other express and implied warranties are disclaimed. Complete warranty terms located at:
www.acuitybrands.com/support/warranty/terms-and-conditions

NOTE: Actual performance may differ as a result of end-user environment and application.
All values are design or typical values, measured under laboratory conditions at 25 °C.
Specifications subject to change without notice.

ESRH SWIVEL-MOUNT RECESSED HOUSING

Specifications (ESRH)

Length: 16 (40.7)

Depth: 4.4 (11.2)

Height: 10.6 (26.92)

Weight: AC: 4.1 (1.87 kgs)
EL: 4.2 (1.91 kgs)

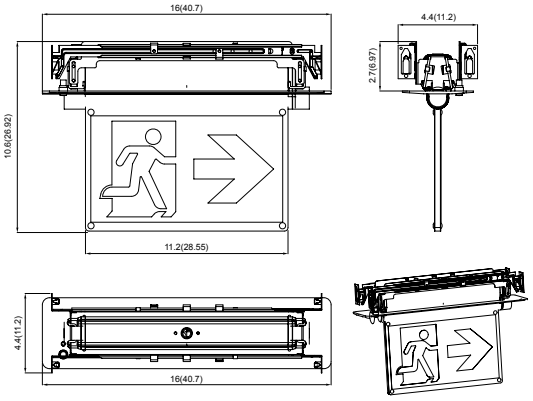

Specifications

Length: 12.1 (30.7)

Depth: 1.8 (4.6)

Height: 9.7 (24.6)

Weight: AC - 2.6 (1.18 kgs)
EL - 2.68 (1.22 kgs)

All dimensions are inches (centimeters) unless otherwise specified.

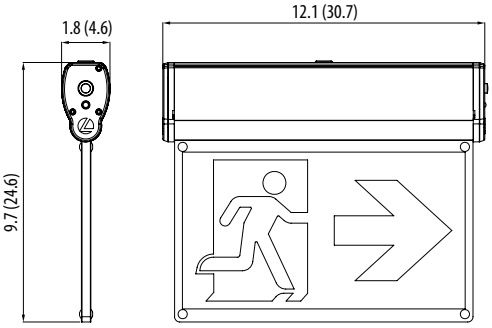

ORDERING INFORMATION For shortest lead times, configure product using **bolded options.**

Example: EDGRM W EL M6

EDGRM			
Family	**Housing color**	**Input voltage**	**Operation**
EDGRM	**AL** Brushed aluminum **W** White **B** Black	**(blank)** 120-347 Universal voltage	**(blank)** AC only **EL** Nickel Metal Hydride

Accessories: *Order as separate catalog number.*	
ELA WG1	Wireguard (back mount only, 13 3/4"H x 15 1/4"W x 6"D) LINK
ESRH ALWH M6	Edge-lit swivel mount recessed housing, brushed aluminum and white
ESRH B M6	Edge-lit swivel mount recessed housing, black

EDGRM Quantum®, Running Man LED Surface Mount Edge-Lit

SPECIFICATIONS

Electrical Primary Circuit				
	Typical LED life[1]	Supply Voltage	Max Amps	Max Watts
White LED	>5 years	120	0.04	4.4
		347	0.01	4.4

BATTERY				
Nickel Metal Hydride				
Voltage	Typical shelf life[2]	Typical life[3]	Maintenance[3]	Temperature range[4]
3.6	3 years	3-5 years	none	50°F - 104°F (10°C - 40°C)

Notes

1. Based on 24/7 operation. The typical life of the running man LED lamp is >5 years.
2. At 77°F (25°C).
3. All life safety equipment, including emergency lighting for path of egress must be maintained, serviced and tested in accordance with all National Fire Protection Association (NFPA) and local codes. Failure to perform the required maintenance, service, or testing could jeopardize the safety of occupants and will void all warranties.
4. Temperature range where unit will provide capacity for 90 minutes. Higher and lower temperatures affect life and capacity.

SLOPED CEILING MOUNT

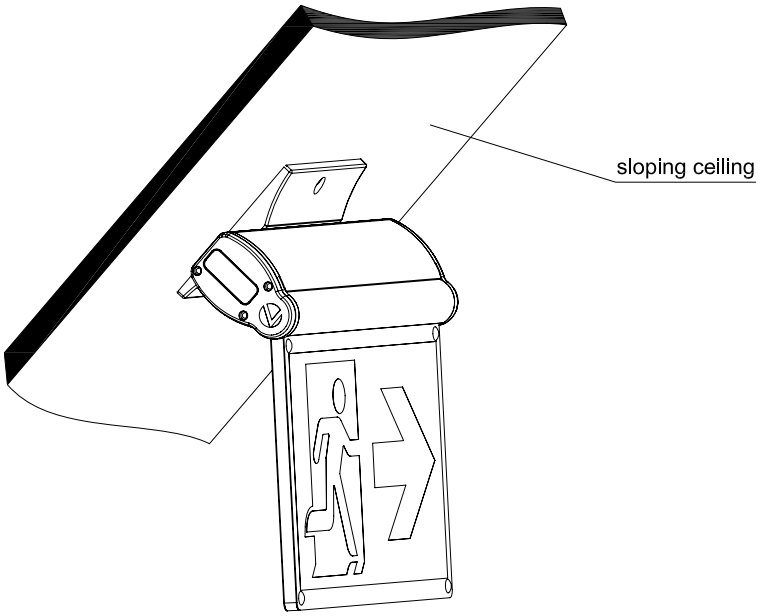

ROTATE ANGLE EXAMPLE

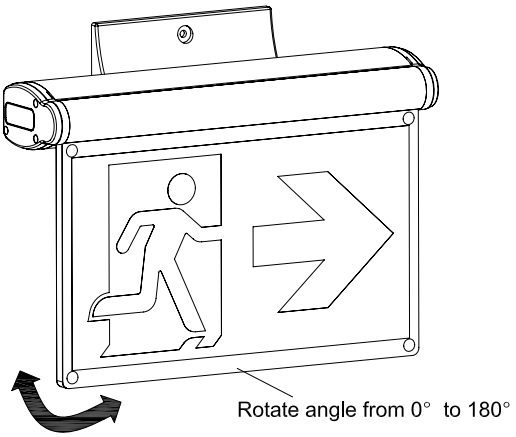

© 2021-2025 Acuity Brands Lighting, Inc. All rights reserved.